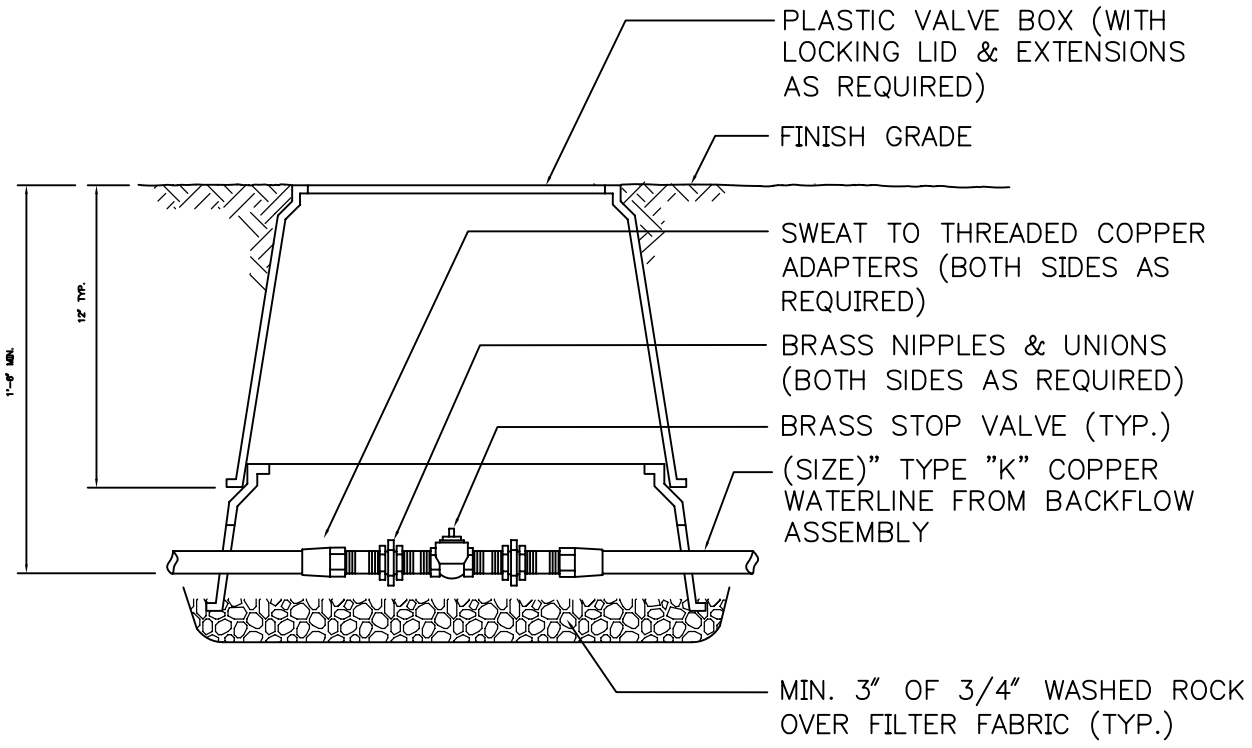

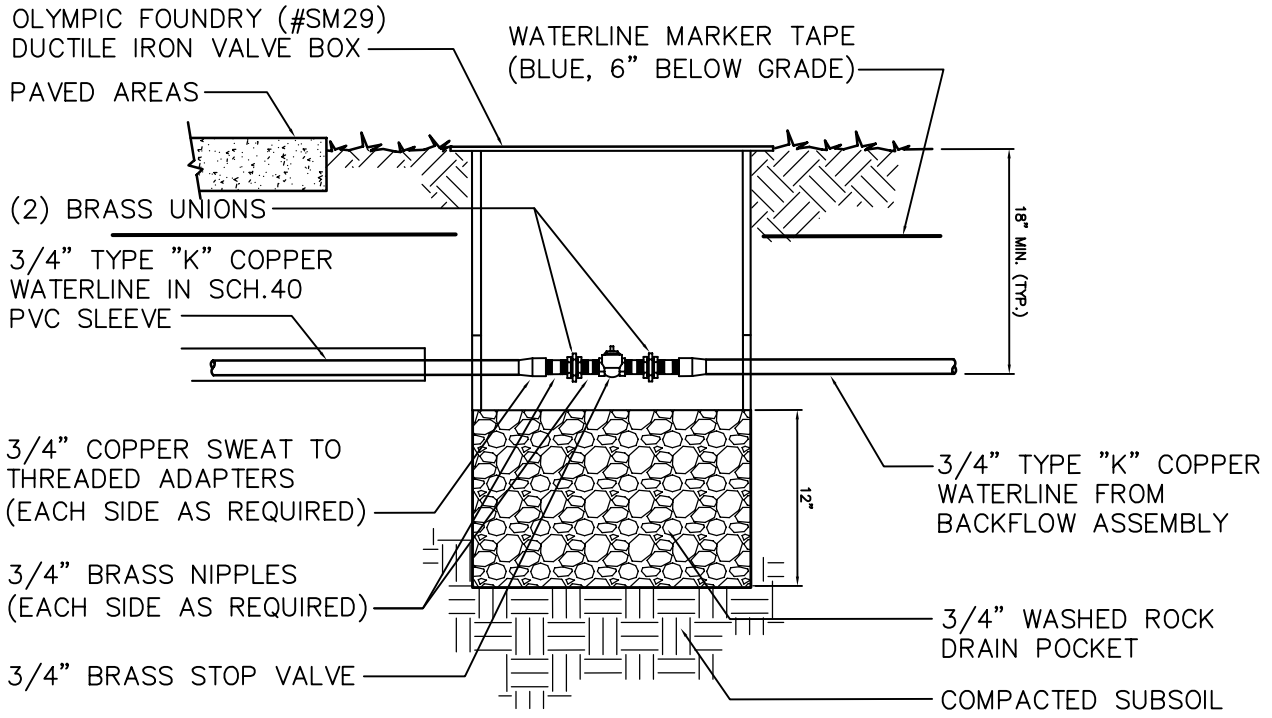

City of Seattle Department of Parks & Recreation	**POTABLE WATER SYSTEM** **MANUAL SHUT-OFF VALVE DETAILS** **STD. DETAIL NO. 02720.78**