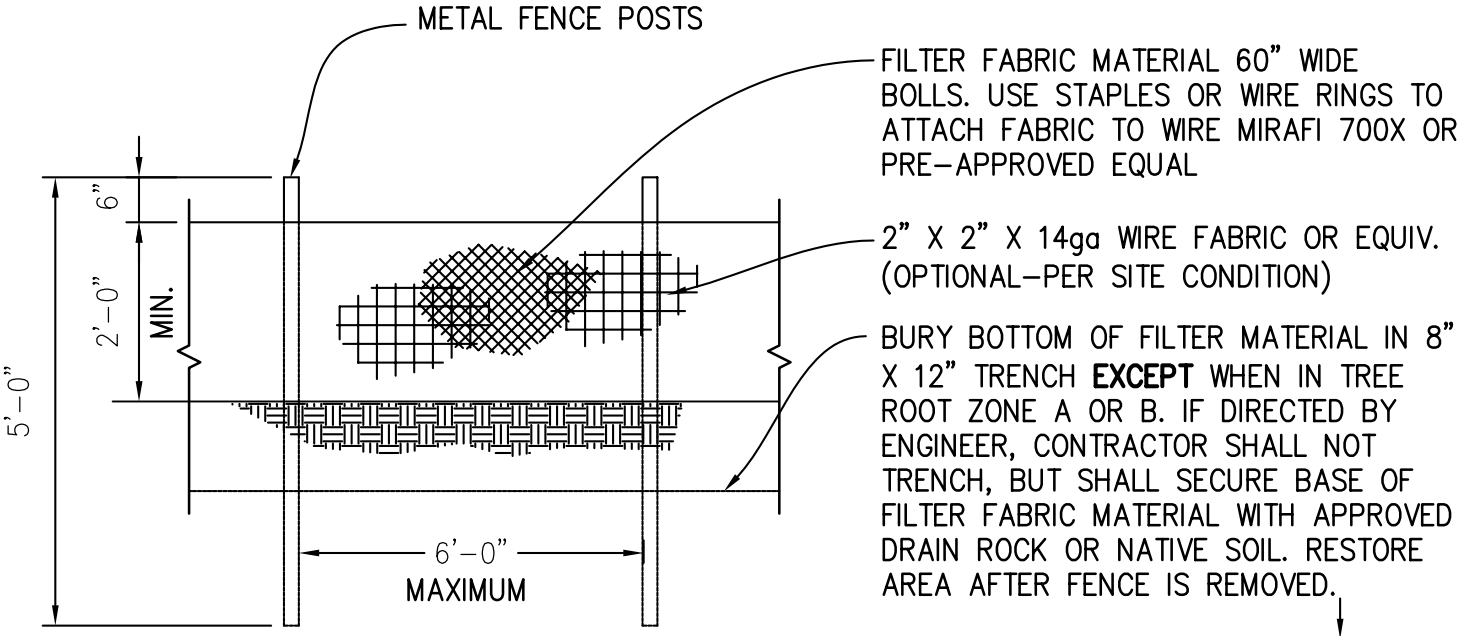

NOTE: ANGLE SILT FENCE BACK UP THE SLOPE AT THE END OF RUN.

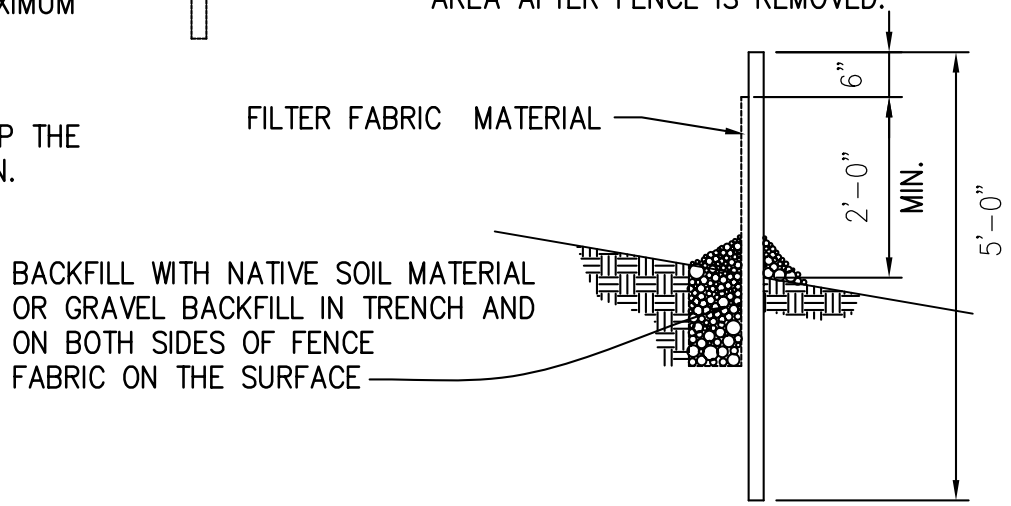

PURPOSE: TO INTERCEPT & DETAIN SMALL AMOUNTS OF SEDIMENT UNDER SHEET FLOW CONDITIONS FROM DISTURBED AREAS DURING CONSTRUCTION AND TO REDUCE THE VELOCITY OF SHEET FLOWS..

City of Seattle Department of Parks & Recreation	**TEMPORARY ANTI-SILTATION FENCING** **STD. DETAIL NO. 01 57 13.29**