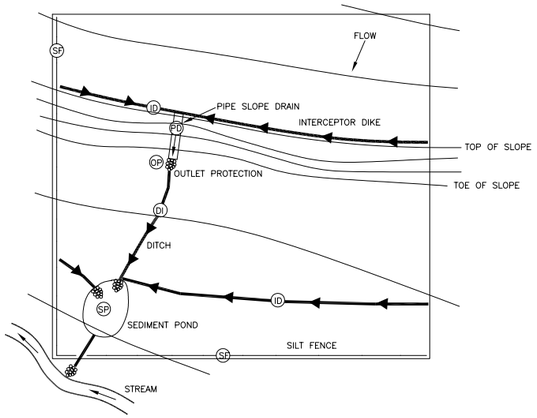

1 TYPICAL EROSION CONTROL PLAN

PARKS STD. DETAIL # 02950.57 NOT TO SCALE

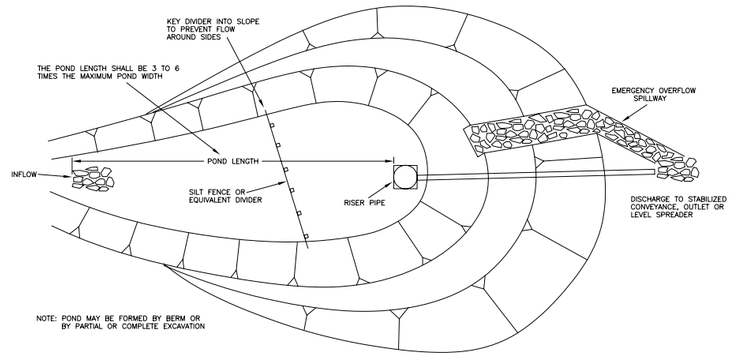

2 TYPICAL SEDIMENT POND LAYOUT

PARKS STD. DETAIL #02950.58 NOT TO SCALE

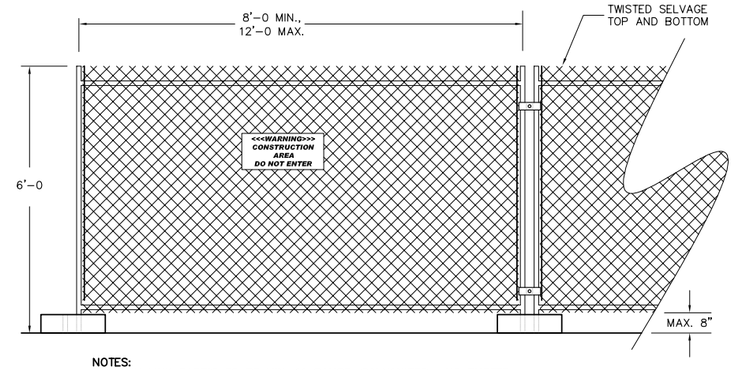

NOTES:
1. CHAIN LINK FABRIC TO BE MIN. 11 GAUGE, GALVANIZED. NO RUSTED OR EXCESSIVELY MALFORMED FABRIC.
2. FENCE BASES SHALL BE OF SUFFICIENT WEIGHT and/or SPREAD TO ADEQUATELY SUPPORT EACH PANEL.
3. PANEL-TO-PANEL CONNECTIONS SHALL BE MADE AT A MIN. TWO LOCATIONS PER CONNECTION UNLESS OTHERWISE APPROVED.
4. PROVIDE CONSTRUCTION WARNING SIGNAGE 50'O.C. ALONG FENCING INSTALLATION.

3 6' HIGH CHAIN LINK CONSTRUCTION FENCING

PARKS STD. DETAIL # 02270.25 NOT TO SCALE

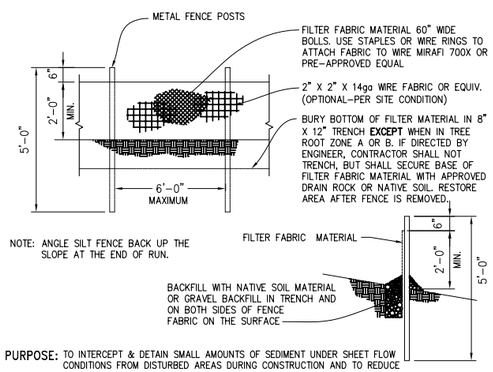

PURPOSE: TO INTERCEPT & DETAIN SMALL AMOUNTS OF SEDIMENT UNDER SHEET FLOW CONDITIONS FROM DISTURBED AREAS DURING CONSTRUCTION AND TO REDUCE THE VELOCITY OF SHEET FLOWS..

4 FILTER FENCE (SILT CONTROL FENCING)

DPD T.E.S.C. STD. DETAIL NO. E 3.10 NOT TO SCALE

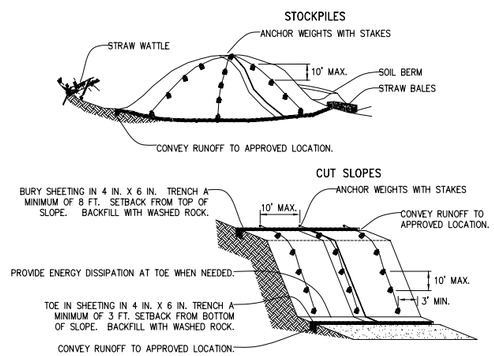

PURPOSE: TO PROVIDE IMMEDIATE TEMPORARY EROSION PROTECTION TO SLOPES AND DISTURBED AREAS THAT CANNOT BE COVERED BY MULCHING & MATTING

5 TEMPORARY PLASTIC COVERING

DPD T.E.S.C. STD. DETAIL NO. E 1.20 NOT TO SCALE

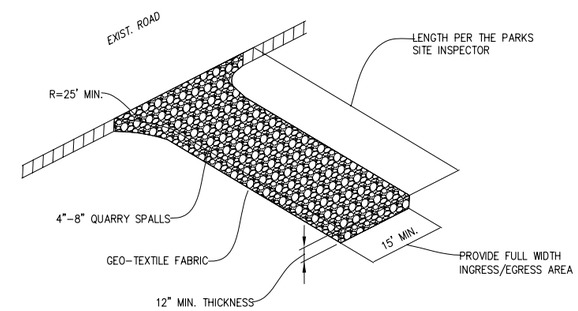

STABILIZED ACCESS SHALL BE USED IN ALL AREAS OF THE SITE WITH VEHICLE TRAFFIC AND PARKING, INCLUDING PLANTING STRIPS. OTHER MEANS OF PROVIDING STABILIZED ACCESS WILL BE CONSIDERED.

PURPOSE: TO REDUCE THE AMOUNT OF MUD, DIRT, ROCKS, ETC. TRANSPORTED ONTO PUBLIC ROADS BY MOTOR VEHICLES OR RUNOFF.

6 CONSTRUCTION ACCESS & WHEEL WASH

DPD T.E.S.C. STD. DETAIL NO. E 2.10 NOT TO SCALE

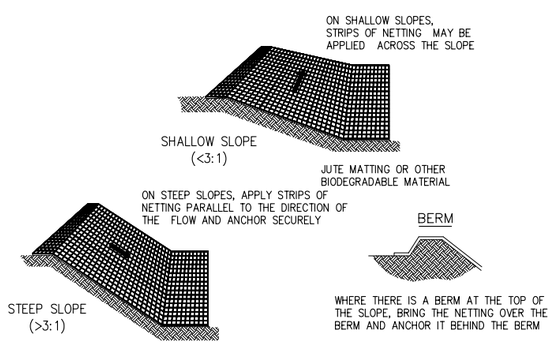

PURPOSE: TO PROVIDE IMMEDIATE PROTECTION TO EXPOSED SOILS DURING THE PERIOD OF SHORT CONSTRUCTION DELAYS

7 MATTING/ROLLED EROSION CONTROL MEASURES

DPD T.E.S.C. STD. DETAIL NO. E 1.15 NOT TO SCALE

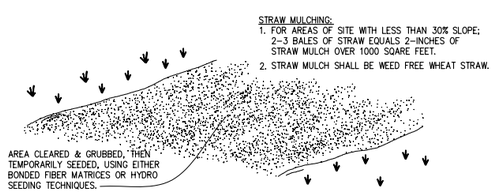

NOTE: REFER TO SPR STANDARD SPECIFICATIONS SECTION 02931, 35 & 71 FOR EROSION CONTROL HYDROSEEDING PROCEDURES AND SEED AND FERTILIZER SPECIFIC IMFORMATION OR USE THE FOLLOWING MIXTURE AS DIRECTED BY THE ENGINEER.

ALTERNATE SEEDING MIXTURE (AS DIRECTED)			
NAME	PROPORTIONS BY WEIGHT	% PURITY	% GERMINATION
REDTOP (AGROSTIS ALBA)	10%	92	90
ANNUAL RYE (LOLIUM MULTIFLORUM)	40%	98	90
CHEWINGS FESCUE (FETUCA RUBRA COMMUTATA)	40%	97	80
WHITE DUTCH CLOVER (TRIFOLIUM PEPENS)	40%	96	90

PURPOSE: TO PROVIDE TEMPORARY SOIL STABILIZATION BY PLANTING GRASSES AND LEGUMES TO AREAS THAT WOULD REMAIN BARE FOR MORE THAN 7 DAYS WHERE PERMANENT COVER IS NOT NECESSARY OR APPROPRIATE.

8 TEMPORARY SEEDING & MULCHING

DPD T.E.S.C. STD. DETAIL NO. E 1.10 NOT TO SCALE

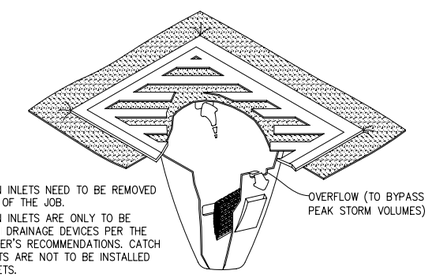

NOTES:
1. STORM DRAIN INLETS NEED TO BE REMOVED AT THE END OF THE JOB.
2. STORM DRAIN INLETS ARE ONLY TO BE INSTALLED IN DRAINAGE DEVICES PER THE MANUFACTURER'S RECOMMENDATIONS. CATCH BASIN INSERTS ARE NOT TO BE INSTALLED IN CURB INLETS.
3. INSERTS SHALL BE INSPECTED AND MAINTAINED WHEN A 1/2 INCH RAIN ACCUMULATES WITHIN A 24 HOUR PERIOD. CLEAN AND/OR REPLACE INSERT WHEN HALF OF THE TRAP IS FILLED WITH SEDIMENTS.

PURPOSE: TO PREVENT SEDIMENT FROM ENTERING STORM DRAINAGE SYSTEMS PRIOR TO PERMANENT STABILIZATION OF THE DISTURBED AREA.

9 STORM DRAIN INLET (CATCH BASIN) INSERT

DPD T.E.S.C. STD. DETAIL NO. E 3.30 NOT TO SCALE

>>>>CAUTION - CALL 811<<<<
UTILITY NOTIFICATION CENTER BEFORE YOU DIG!
WWW.CALLBEFOREYOUDIG.ORG

NOT LESS THAN **2** OR MORE THAN **10** BUSINESS DAYS PRIOR TO COMMENCING EXCAVATION OR DEMOLITION, SECURE THE SERVICES OF A COMMERCIAL UNDERGROUND UTILITIES LOCATOR SERVICE TO IDENTIFY BELOW-GROUND IMPROVEMENTS THAT MAY NOT BE INDICATED ON THE DRAWINGS. ADDITIONALLY, TO REQUEST ON-SITE UNDERGROUND UTILITY SYSTEMS LOCATES, CALL **SPR INSPECTION REQUEST LINE @ (206) 684-7034.** REFER TO SECTIONS 02100 & 02120 OF THE SPECIFICATIONS FOR INSTRUCTIONS ON HOW TO PROCEED.

NO.	REVISION – AS BUILT	DATE
3		
2		
1		

REVIEWED: PARK ENGINEER DATE

All work done in accordance with the City of Seattle Standard Plans and Specifications in effect on the date shown above, and supplemented by Special Provisions.

SEATTLE PARKS AND RECREATION

FACILITY NAME

PROJECT NAME

CONSTRUCTION STORMWATER CONTROL DETAILS

DESIGNED X
DRAWN X
CHECKED X
DATE X
SHEET X OF X
ORDINANCE NO.
CONTRACT NO.
SCALE X

Sht. No.