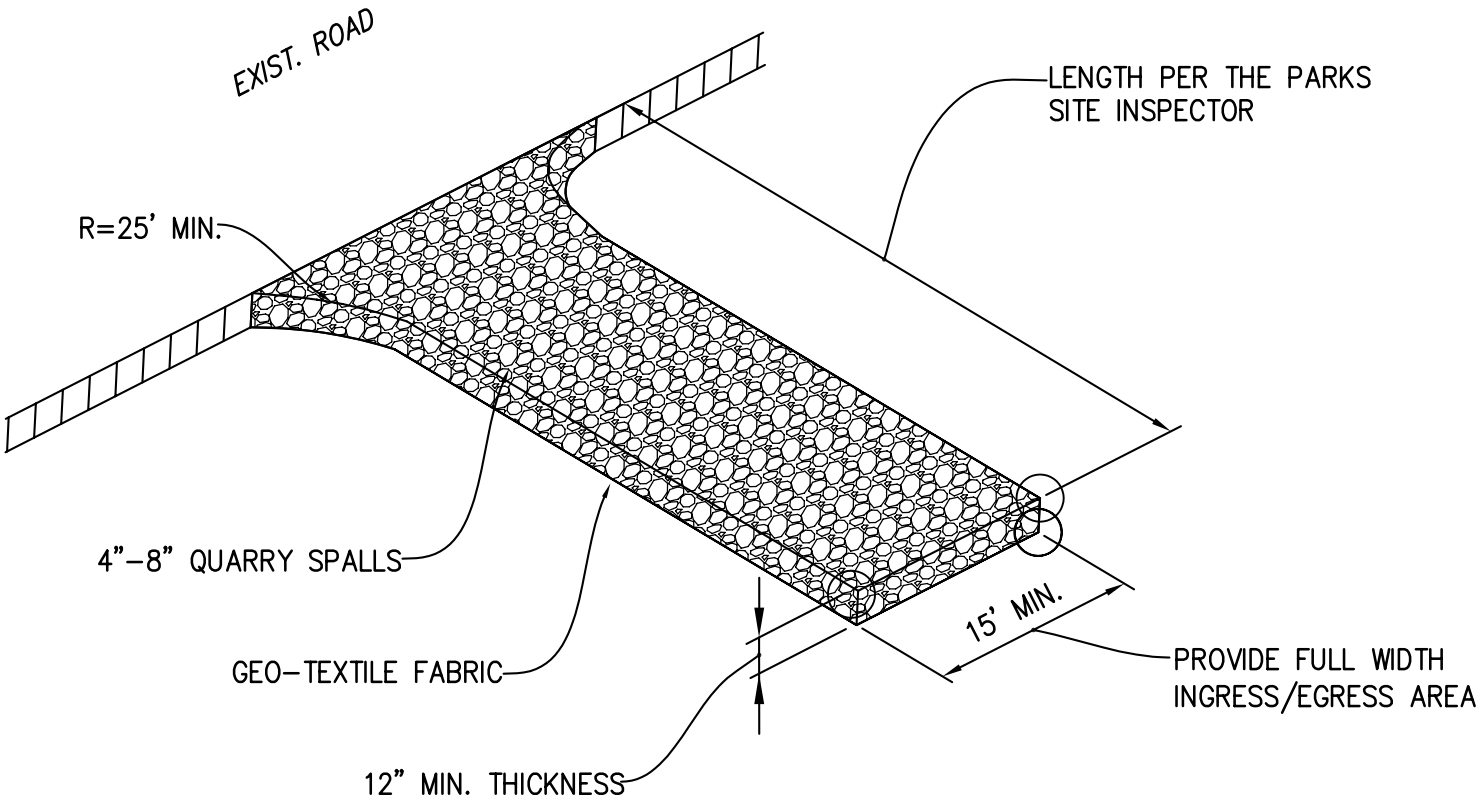

STABILIZED ACCESS SHALL BE USED IN ALL AREAS OF THE SITE WITH VEHICLE TRAFFIC AND PARKING, INCLUDING PLANTING STRIPS. OTHER MEANS OF PROVIDING STABILIZED ACCESS WILL BE CONSIDERED.

PURPOSE: TO REDUCE THE AMOUNT OF MUD, DIRT, ROCKS, ETC. TRANSPORTED ONTO PUBLIC ROADS BY MOTOR VEHICLES OR RUNOFF.

City of Seattle Department of Parks & Recreation	**TEMPORARY CONST. ENTRANCE DETAIL** **STD. DETAIL NO. 01 57 13.16**