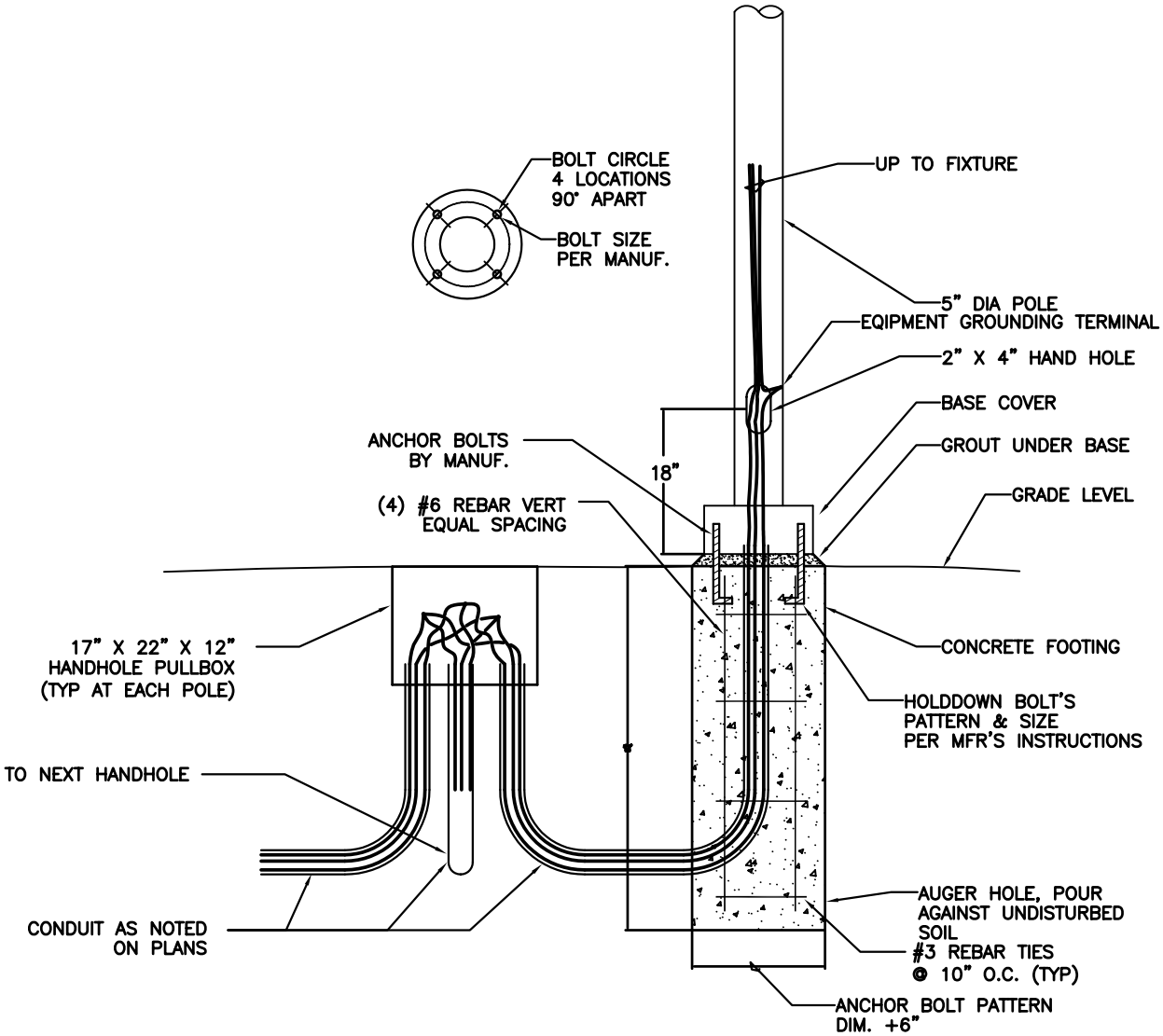

1 LIGHTING POLE & FOOTING

NOT TO SCALE

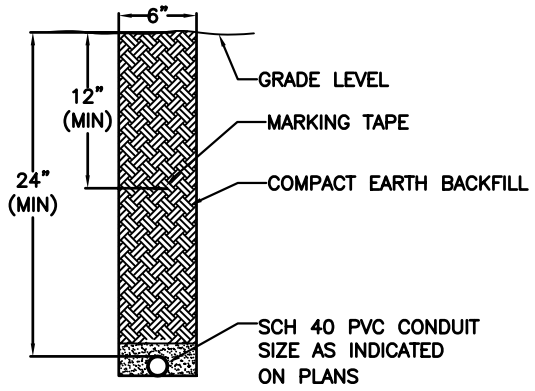

2 ELECTRICAL TRENCHING

NOT TO SCALE

City of Seattle Department of Parks & Recreation	**FIELD LIGHTING HANDHOLES-FOOTING DETAILS** **STD. DETAIL NO. 26 05 33.16**