Thermoplastic/ Heavy Cast Aluminum Covers

Specification Grade

Pass & Seymour

legrand

Industrial Grade Weatherproof Covers

Features

- Unbreakable glass-filled polycarbonate construction to withstand years of job site abuse and harsh environmental exposure. Stainless steel mounting screws also resist corrosion.
- Covers comply with 2005 NEC Section 406.8(A) and 406.8(B)(2).
- Molded-in label area (2.8 sq. in.) for pre-printed or handwritten labels for identification of circuits, ratings, and other application data.
- WPG-1 and WPG-2 have lockable "bullnose" for OSHA locktag/tagout compliance.
- Covers fit all competitive inlets and outlets.
- Pre-attached gaskets for easy installation and tight seal to panel or weatherproof box – with no misaligned or collapsed gaskets.
- Tamper-proof hinge features permanent, locked-in pins for added security.

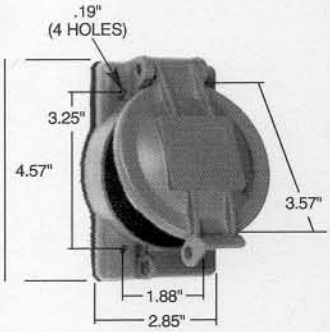

WPG-1

Catalog Number	Description	Color	3rd Party Compliance UL	3rd Party Compliance CSA
Thermoplastic Weatherproof Covers for Flanged Inlet/Outlet				
WPG-1	1.96" Diameter Opening to Accommodate 15/20A Straight Blade, 15A Turnlok, 20403 Power Interrupter	Gray	•	•
WPG-2	2.32" Diameter Opening to Accommodate 20A Turnlok, 30A Turnlok	Gray	•	•
Thermoplastic Weatherproof Cover for Single Receptacles				
7770	2.38" Diameter Opening to Accommodate 50A Turnlok (non-lockout)	Yellow	•	

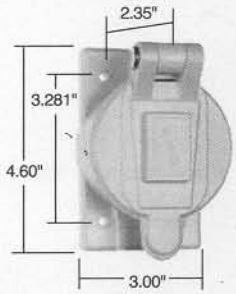

7770

Heavy Cast Aluminum Covers – Flush Enclosures

Features

- Adapter, frame, and cover are heavy cast aluminum.
- No. 8-32 screws hold assembly firmly in place.
- Covers comply with 2005 NEC Section 406.8(A) and 406.8(B)(2).
- Mortar keys provide positive holding means within wall.
- Neoprene gasket seals cover to frame. Moisture and dust cannot enter enclosure.
- Two keys provided for cam lock.
- Purchase enclosure and mounting plate separately
- Mounts on 4" or 4-11/16" box.

	Catalog Number	Description	Color	3rd Party Compliance UL	3rd Party Compliance CSA
Mortared-in Applications					
	4600	Enclosure Only, without Mounting Plate	Gray	•	•
	4600-1P	Mounting Plate for Toggle Switch	Gray	•	•
	4600-7P	Mounting Plate for Single Receptacle Diameter: 1.406"	Gray	•	•
	4600-8P	Mounting Plate for Duplex Receptacle	Gray	•	•
	4600-26P	Mounting Plate for Decorator/GFCI	Gray	•	•
	4609	Replacement Key for Enclosure		•	•

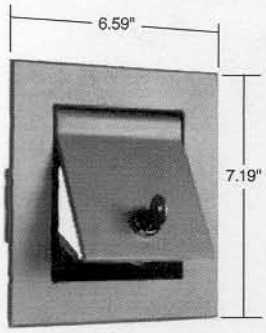

4600

Note: All locks keyed the same.