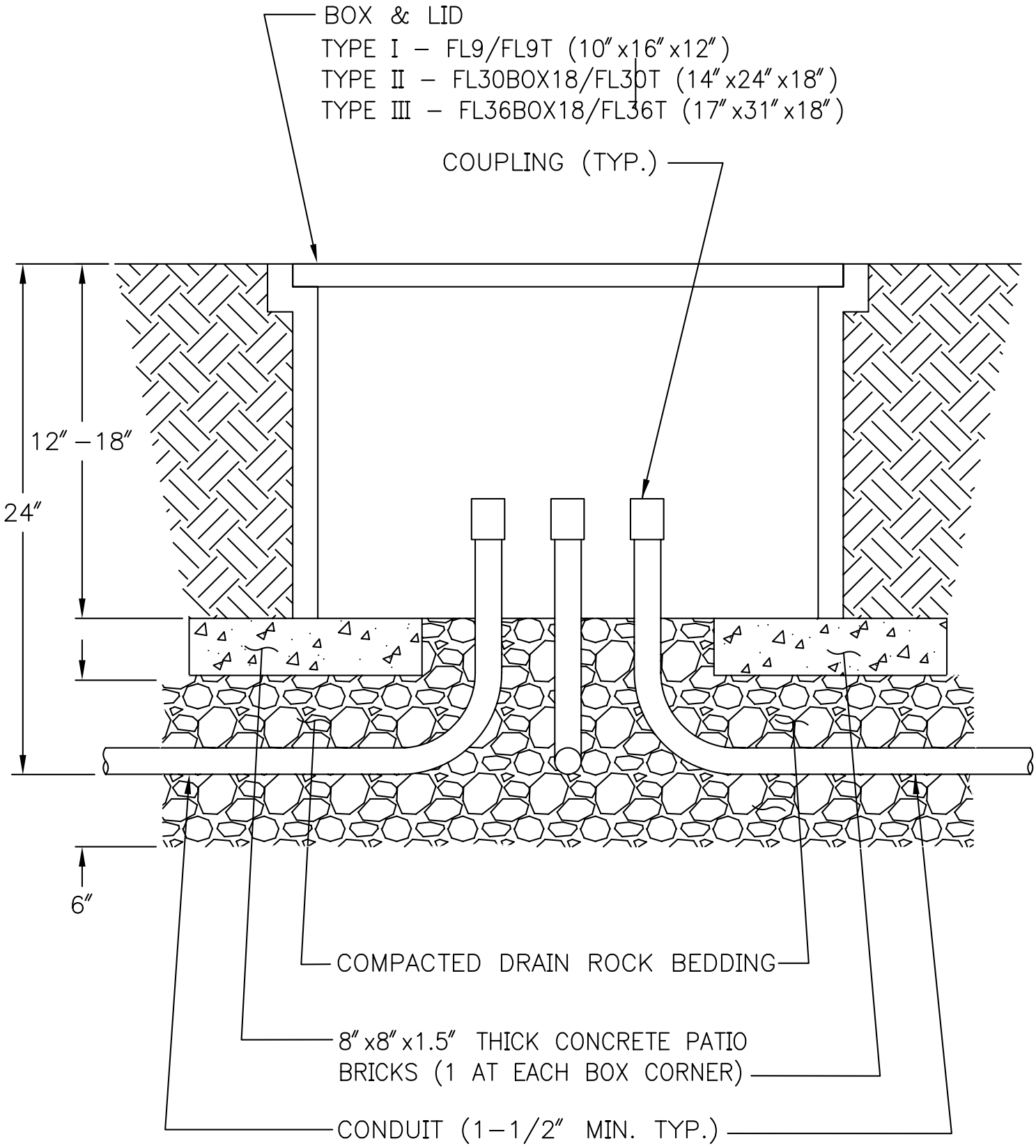

City of Seattle Department of Parks & Recreation	**ELECTRICAL HANDHOLE DETAIL** **STD. DETAIL NO. 26 05 33.13**