Site Plan
Market Grill Outdoor Seating

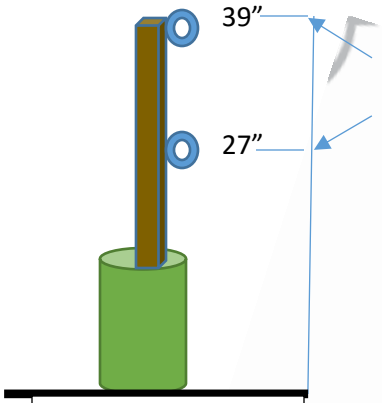

Stanchion Detail

Metal Chair Detail

18”w X 32” h X 30”d

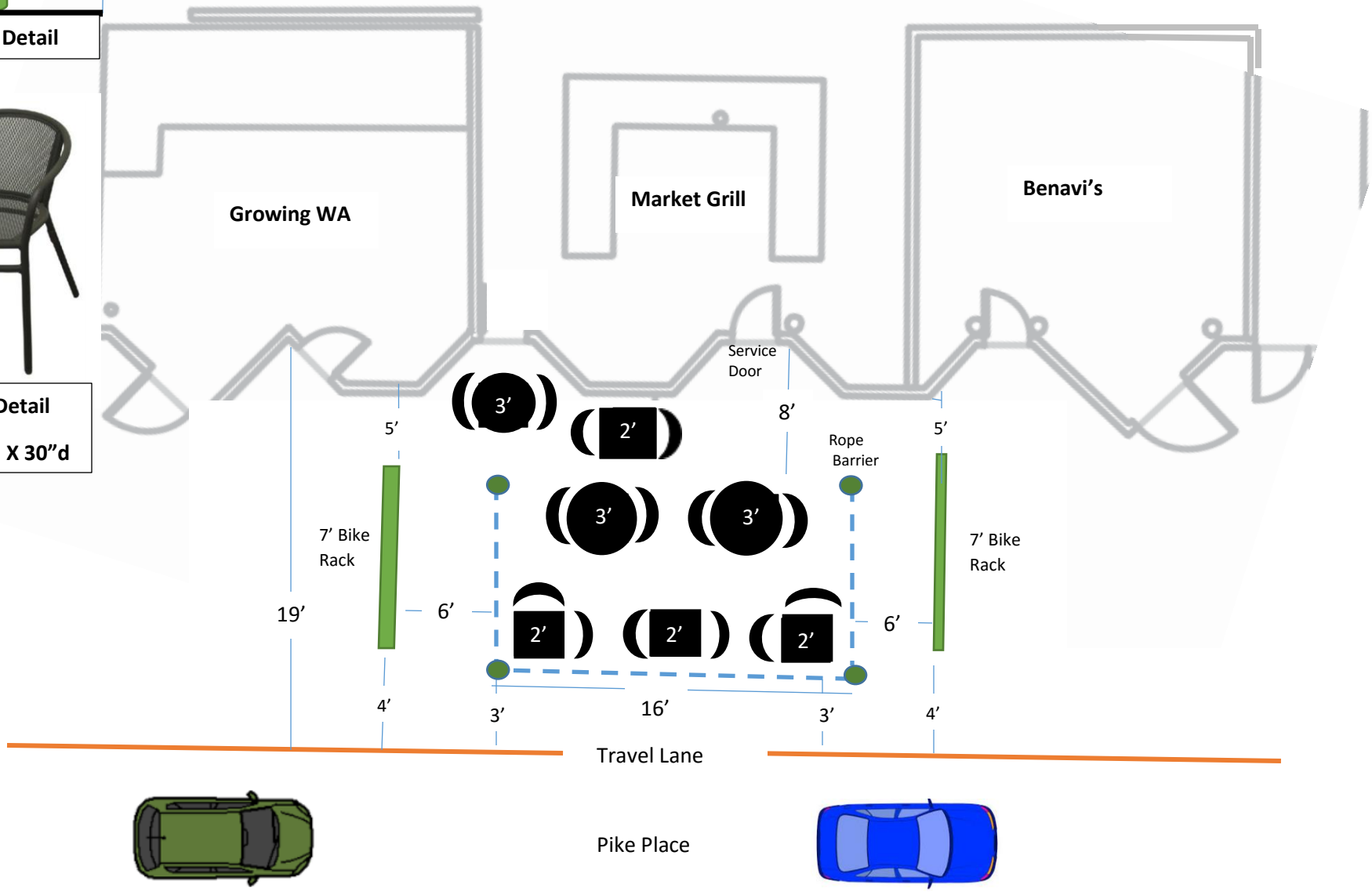

ENTRANCE
3
NOTICE

ENTRANCE
3
NOTICE
DO NOT
BLOCK DOOR

No
Parking
VIOLATORS WILL BE
TOWED AWAY AT
VEHICLE OWNER'S
EXPENSE & RISK
3
NOTICE
DO NOT
BLOCK DOOR

NOTICE
DO NOT
BLOCK DOOR

PULL
TURN OFF HEAT!
DOOR
SHUT
(DOES NOT CLOSE BY ITSELF)
LEAVE BLINDS SHUT
KEEPS SUN OUT & MUCH COOLER