115 KV TRANSMISSION CONSTRUCTION (HORIZONTAL LINE POST)

NOTE: For guying, see standard D6-4

Maximum design angle loading 2600 lbs.

Maximum cantilever strength 2800 lbs.

Equivalent spacing 9'

Minimum clearance between 115kV and 26kV circuits is 7' at maximum sag.
See Const. Guidelines D2-2 and D2-3.

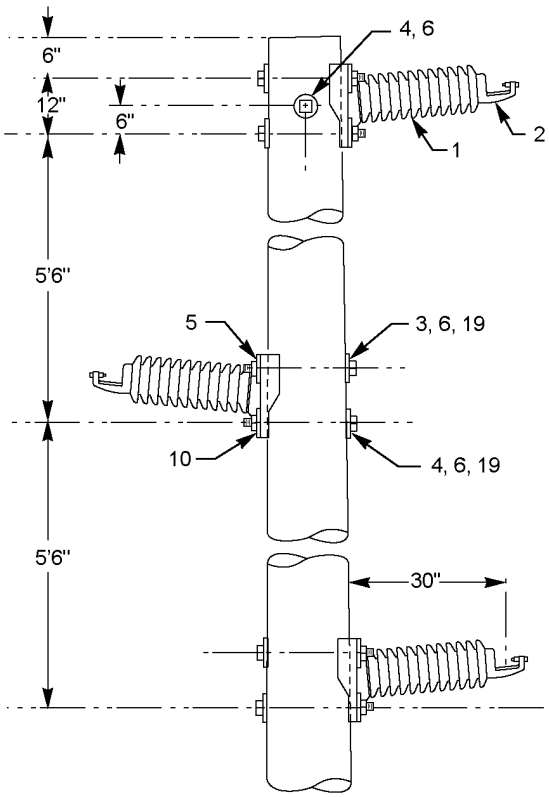

TANGENT POLE - NO STATIC WIRE

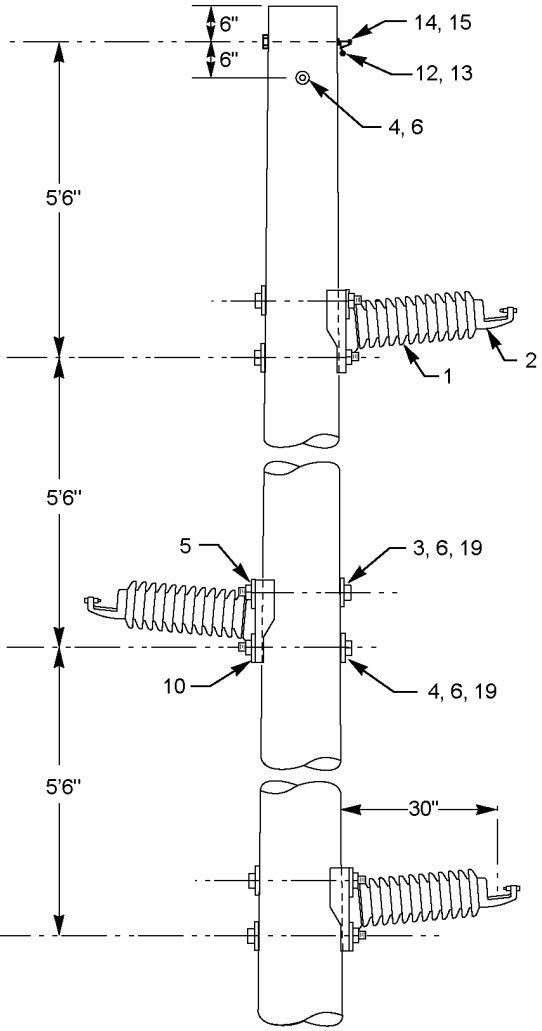

TANGENT POLE - WITH STATIC WIRE

ORIGINATOR	STANDARDS COORDINATOR	STANDARDS SUPERVISOR	UNIT DIRECTOR
Jim S. Horn	Charles L. Shaffer	John C. Skinner	Betty Robin

115 KV TRANSMISSION CONSTRUCTION (VERTICAL LINE POST)

Maximum design angle loading 2600 lbs.

Maximum cantilever strength 2800 lbs.

Minimum clearance between 115 kV and 26kV circuits is 7' at maximum sag.
See Const. Guidelines D2-2 and D2-3.

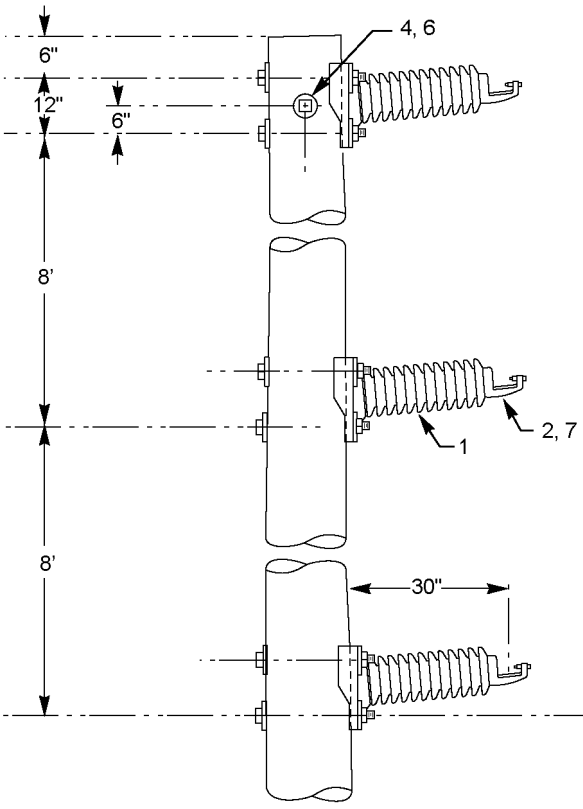

TANGENT POLE - NO STATIC WIRE

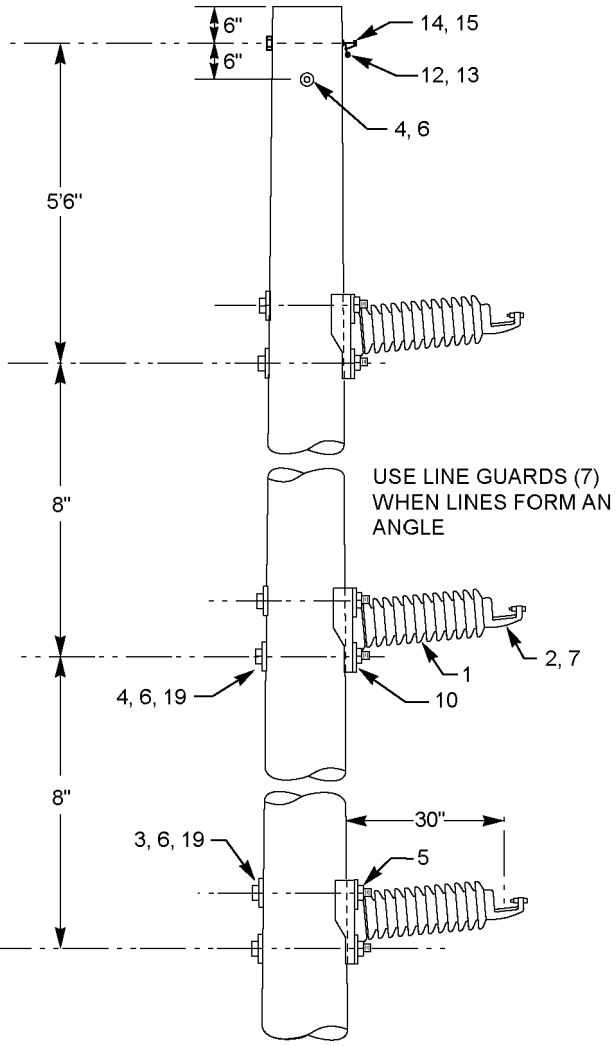

TANGENT POLE - WITH STATIC WIRE

115 KV TRANSMISSION CONSTRUCTION (VERTICAL SWING CORNER)

NOTE: Use 7 insulators for wood poles and 8 insulators for steel or concrete poles.

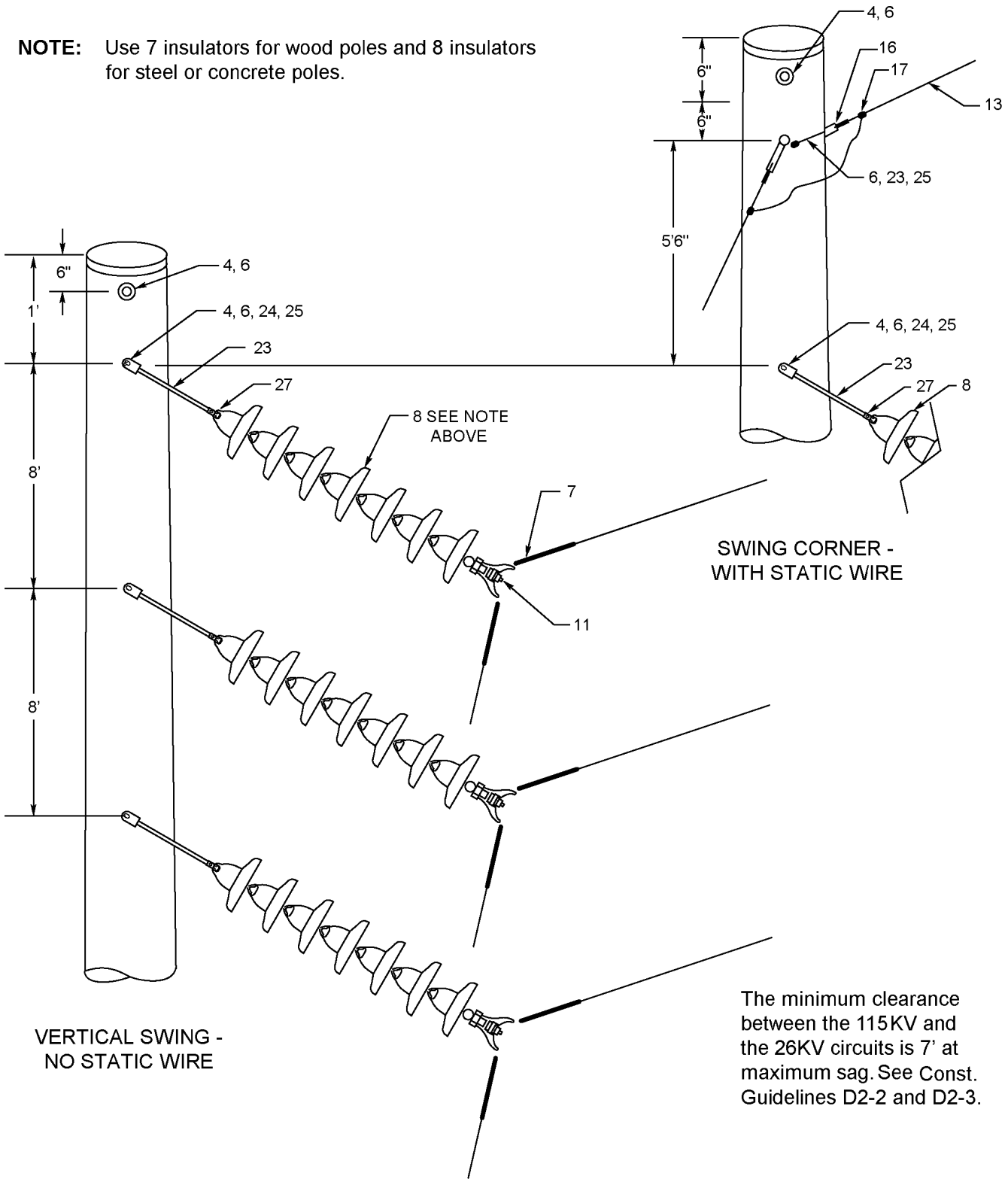

The minimum clearance between the 115KV and the 26KV circuits is 7' at maximum sag. See Const. Guidelines D2-2 and D2-3.

115 KV TRANSMISSION CONSTRUCTION (VERTICAL DEADEND)+

NOTES: 1. On a high tension line (maximum design tension over 5000 lbs.) use body and eye deadend STK # 659668 thru 659799 and compression terminal STK # 651220 thru 651224.

2. On a low tension line (maximum design tension of 5000 lbs. or less) - - - if the deadend structure is steel or concrete **and** the next structure is steel or concrete, use body and eye; if the next structure is wood, **or** both the deadend structure and the next structure are wood, the aluminum strain clamp may be used.

3. Use 7 insulators for wood poles and 8 insulators for steel or concrete poles.

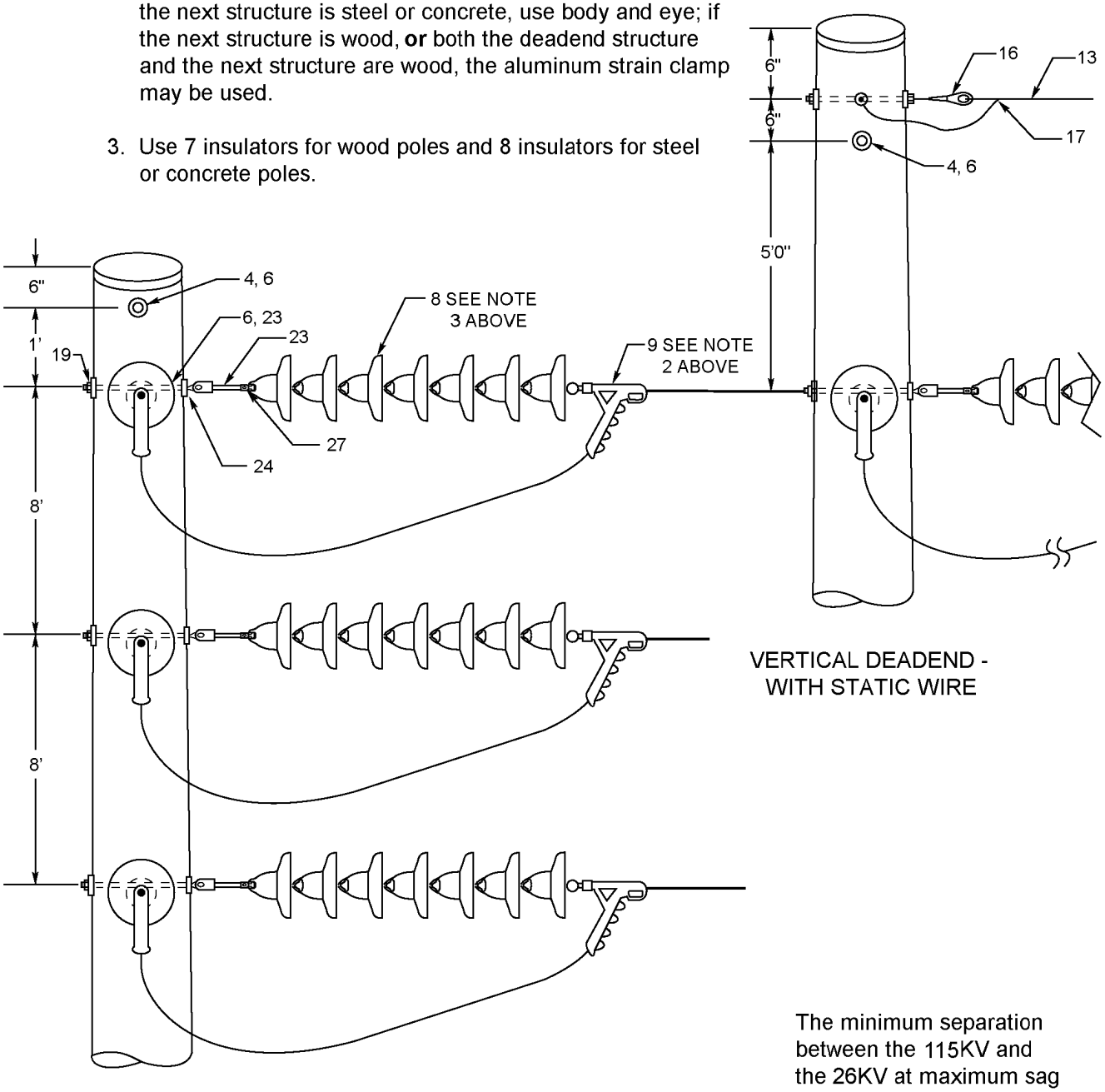

VERTICAL DEADEND - WITH STATIC WIRE

VERTICAL DEADEND - NO STATIC WIRE

The minimum separation between the 115KV and the 26KV at maximum sag shall be 7'. See Const. Guidelines D2-2 and D2-3.

115 KV TRANSMISSION CONSTRUCTION
(STATIC WIRE, MATERIAL LISTING)

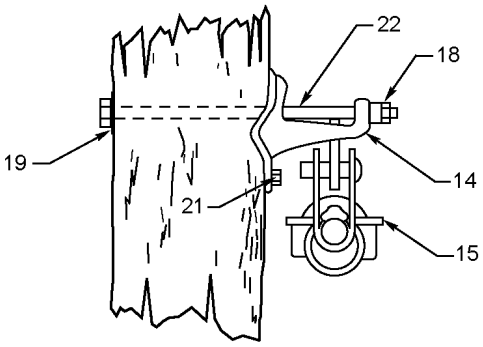

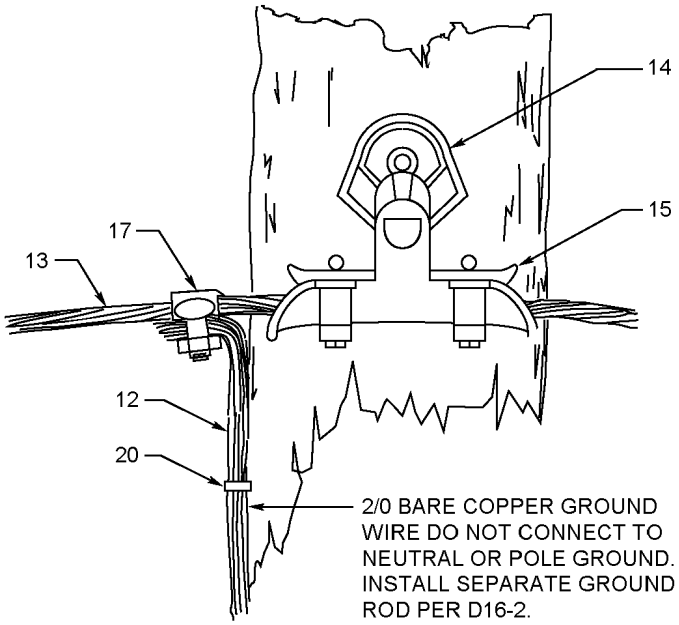

ITEM	QUANTITY	STOCK NUMBER	DESCRIPTION
1	3	690184	INSULATOR, Line Post, 115KV
2	3	695193-695194	CLAMP, ALUMINUM, for Line Post Insulators
3	3	780875E-781072E	BOLT, MACHINE, Galv. 3/4” x L
4	5	780845E-781046E	BOLT, MACHINE, Galv. 5/8” x L
5	8	584267E	WASHER, LOCK, Coiled Spring 3/4”
6	8	585135E	WASHER, SQUARE FLAT, Galv., 2-1/4”
7	3	658935-658946	LINE GUARD, Formed, For Conductor Used
8	21/24	690210	INSULATOR, SUSPENSION, Porcelain
9	3/6	693805-693825	CLAMP, STRAIN, Aluminum
10	4	584261E	WASHER, LOCK, Coiled Spring 5/8”
11	3	695115-695167	CLAMP, SUSPENSION, Aluminum
12	100’	610425	WIRE, # 2/0, BC
13	-	566425	WIRE, STATIC, .486, Alumoweld
14	1	565005	BRACKET, Ground Wire
15	1	695015	CLAMP, SUSPENSION, Static Wire
16	1 or 2	Non-stock	DEADEND, AUTOMATIC, 1/2” Static Wire, Reliable 5204-L
17	2	669379E	CONNECTOR, Static Wire Jumper
18	1	Non-stock	PALNUT #4532, 5/8”, galvanized
19	1	584947E	WASHER, FLAT, 3” x 3” x 3/16”
20	-	583261E	STAPLES, Copperweld, 1/2” x 2”
21	1	785261E	BOLT LAG, 1/2” x 2”
22	1	780845E	BOLT, MACHINE, 5/8” x 12”
23	3 or 6	561112E	BOLT, OVAL EYE, 5/8” x 12”
24	3 or 6	565280	NUT, CLEVIS, 5/8”
25	3 or 6	565252E	NUT, OVAL EYE, 5/8”
27	6	695505	BALL CLEVIS