Chapter 8 Drainage & Wastewater Infrastructure

Chapter 8 Drainage and Wastewater Infrastructure 8-1

8.1 Key Terms 8-2
8.1.1 Abbreviations 8-2
8.1.2 Definitions 8-3

8.2 General Information 8-6
8.2.1 Comprehensive Plans, Codes, and Policies 8-7
8.2.2 System Maps 8-8

8.3 General Requirements 8-8
8.3.1 Standard Specifications and Plans 8-8
8.3.2 Regulations 8-9
8.3.3 Industry Standards and other Agency Standards 8-10

8.4 Basis of Design 8-12

8.5 Design Process 8-12

8.6 Other Design Disciplines 8-12
8.6.1 Structural 8-12
8.6.2 Landscaping 8-12
8.6.3 Instrumentation and Control 8-13
8.6.4 Pump Stations 8-13

8.7 Storm Drain Design 8-13
8.7.1 Hydrologic and Hydraulic Evaluation 8-14
8.7.2 Drainage Basins 8-15
8.7.3 CAM 1180 Design Guidelines for Public Storm Drain Facilities 8-16
8.7.4 Pipe Storm Drain 8-24
8.7.5 Maintenance Holes 8-31
8.7.6 Ditches and Culverts 8-37
8.7.7 Culverts in Streams and Intermittent Streams 8-41
8.7.8 Water Quality Treatment 8-42
8.7.9 Flow Control 8-43
8.7.10 Green Stormwater Infrastructure 8-44
8.7.11 Outfalls 8-44

8.8 Sanitary Sewer Design 8-46
8.8.1 General 8-46
8.8.2 Hydraulic Evaluation and Capacity Analysis 8-47
8.8.3 Sanitary Sewer Basins 8-47
8.8.4 Pipe Sewer Sanitary 8-47
8.8.5 Maintenance Holes 8-49

8.9 Combined Sewer Design 8-49
8.9.1 Hydrologic and Hydraulic Evaluation 8-50
8.9.2 Combined Sewer Basins 8-50
8.9.3 CAM 1180 Design Guidelines for Public Storm Drain Facilities 8-50
8.9.4 Pipe Sewer Combined 8-50
8.9.5 Maintenance Holes 8-52
8.9.6 Outfalls 8-52
8.9.7 Overflow Monitoring 8-52

8.10 Rehabilitation Methods Using Trenchless Technology 8-52

8.11 Construction 8-56
8.11.1 Alternative Construction Methods 8-56
8.11.2 Construction Stormwater Control 8-57
8.11.3 Bypassing Flow in Existing Sewer 8-58
8.11.4 Abandonment and Removals 8-58
8.11.5 Acceptance Procedures 8-58
8.11.6 Connecting to Existing Systems 8-59

8.12 Drainage and Sewage Easements 8-59

8.13 Resources 8-61

Appendices

Appendix 8A - Structural Calculations for Maintenance Holes
Appendix 8B - Useful Figures and Concepts
Appendix 8C - GSI Manual
Appendix 8D - CAM 1180
Appendix 8E - Core Tap Procedures for Storm and Sewer Mains

List of Figures

Figure 8-1 Hydraulic Grade Line Requirements 8-26
Figure 8-2 Hanson Hole Size Chart 8-33
Figure 8-3 Maintenance Hole Sizing Methodology 8-34
Figure 8-4 Open Drop Connection for Maintenance Holes 8-37

List of Tables

Table 8-1 City Regulations for Drainage and Wastewater Facilities 8-9
Table 8-2 Partial List of Industry Standards and Specifications 8-10
Table 8-3 Other Agency Standards 8-11
Table 8-4 Erosion Protection for Culvert Design 8-39
Table 8-5 Inlet/Outlet Protection Required Conditions at Given Velocities 8-40
Table 8-6 Rehabilitation Methods for Specified Defects in Pipelines 8-53
Table 8-7 Advantages and Disadvantages of Lining 8-54
Table 8-8 Advantages and Disadvantages of Slip Lining 8-54
Table 8-9 Advantages and Disadvantages of Pipe Bursting 8-55
Table 8-10 Advantages and Disadvantages of Pipe Reaming 8-55
Table 8-11 Trenchless Technology Alternatives 8-56
Table 8-12 SPU Minimum Drainage and Sewer Easements 8-60

Chapter 8 DRAINAGE AND WASTEWATER INFRASTRUCTURE

This chapter of the Design Standards and Guidelines (DSG) presents Seattle Public Utilities (SPU) standards and guidelines for storm drain, wastewater (sewer), and combined sewer facilities in the City of Seattle (the City), typically in the right-of-way (ROW). The primary audience for this chapter is SPU engineering staff. DSG standards are shown as underlined text. The information in this chapter should be used in conjunction with other DSG chapters.

Combined sewer overflow (CSO) control facilities are not included in this document. For pump stations and force mains, see *DSG Chapter 11, Pump Stations*. Guidelines for public storm drain facilities are provided to external users in Client Assistance Memo (CAM) 1180, Design Guidelines for Public Storm Drain Facilities (provided as **Appendix 8D - CAM 1180**). SPU coordinates updates to CAM 1180 with the Seattle Department of Transportation (SDOT). References to CAM 1180 are included in this document along with some background considerations.

The City of Seattle Stormwater Manual describes stormwater management best management practices (BMPs). This chapter does not establish separate requirements for stormwater management. Refer to the Stormwater Manual for requirements and exceptions for design of water quality and detention BMPs in the ROW. This chapter presents some background considerations and SPU preferences regarding those BMPs. For links to stormwater code compliance, refer to section 4.12 of *DSG Chapter 4, General Design Considerations*. References for guidelines for green stormwater infrastructure (GSI) facilities are in GSI Design Manual, Volume 2 (provided as **Appendix 8C - GSI Manual**).

SPU is responsible for the Side Sewer Code and Director's Rule. SPU has contracted administration of these regulations to the Seattle Department of Construction and Inspections (SDCI). SDCI's website provides the easiest access to these regulations for both internal and external users.

Note: *This DSG does not replace the professional judgement of an experienced engineer.*

8.1 KEY TERMS

Abbreviations and definitions given here follow either common American usage or regulatory guidance.

8.1.1 Abbreviations

Term	Abbreviation
ACI	American Concrete Institute
ADA	Americans with Disabilities Act
AISC	American Institute of Steel Construction
ANSI	American National Standards Institute
ASTM	formerly American Society of Testing and Materials; now known as ASTM International
AWWA	American Water Works Association
BMP	best management practice
CAM	Client Assistance Memo
CCTV	closed-circuit television
CDF	controlled-density fill
CIP	Capital Improvement Program
City	City of Seattle
CMP	corrugated metal pipe
CSO	combined sewer overflow
DI	ductile iron
DIP	ductile iron pipe
DWW	drainage and wastewater
Ecology	Washington State Department of Ecology
EPA	Environmental Protection Agency
FHWA	Federal Highway Administration
ft	feet
GIS	geographic information system
GSI	green stormwater infrastructure
HDD	horizontal directional drilling
HDPE	high-density polyethylene
I/I	infiltration and inflow
in/hr	inches per hour
JB	junction box
LOB	line of business

Term	Abbreviation
MS4	municipal separate storm sewer system
NCPI	National Clay Pipe Institute
NPDES	National Pollutant Discharge Elimination System
O&M	operations and maintenance
PACP	Pipeline Assessment and Certification Program
PS	pipe sewer combined
PSD	pipe storm drain
psi	pounds per square inch
PSS	pipe sewer sanitary
PVC	polyvinyl chloride
RCP	reinforced concrete pipe
ROW	right-of-way
SDOT	Seattle Department of Transportation
SDCI	Seattle Department of Construction and Inspections
SMC	Seattle Municipal Code
SMT	Seattle Municipal Tower
SOPA	System Operations Planning and Analysis
SD	service drain
Std	standard
VCP	vitrified clay pipe
WAC	Washington Administrative Code
WSDOT	Washington State Department of Transportation

8.1.2 Definitions

Definitions used in this document may be part of data models used in asset tracking and work management in geographic information system (GIS) and Maximo. Others may be defined by regulation or in general use.

Term	Definition
catch basin	A catch basin is a connector to the storm drain system that typically includes an inlet where stormwater enters the catch basin and a sump to capture sediment, debris, and associated pollutants. Catch basins usually have a trap to prevent floating debris from entering and clogging the sewer or drainage line.
cleanout	See City of Seattle Standard Plans 280, 281, and 283. Small pipe access, purpose varies. And pipe rising from a stormwater or sanitary sewer lateral to ground surface with a removable cap or plug. Used to access the lateral to free blockages. A sewer cleanout is usually located just inside the property line and within 18 inches of the building foundation.

Term	Definition
combined sewer	Public combined sewers are publicly owned and maintained systems that carry drainage water and wastewater to a publicly owned treatment works. Seattle Municipal Code (SMC) 22.801.170.
combined sewer overflow (CSO)	A discharge of combined wastewater and drainage water to a receiving water.
CSO control facility	Any facility, structure, or device used to reduce the number of CSOs.
culvert	A culvert is a conduit that allows water to flow under a road, driveway, or other obstruction. Culverts can be made of many different materials; ductile iron and concrete are the most common. In the City of Seattle (City), culverts can be part of the informal drainage system and are often part of larger ditch systems. Culverts are also common on watercourses, including streams and intermittent streams. The design practices and regulatory framework for these different types of culverts differ greatly.
ditch	A ditch is usually defined as a small to moderate depression created to channel water. In the City, ditches generally occur in areas where no formal drainage mainlines exist (mainly north of 85th Street and in southeast and southwest sections). The bottom of ditches can be composed of many different materials, but grass, dirt, and asphalt are the most common types.
ditch and culvert system	Combination of surface conveyance, ditches, and culverts that convey stormwater. Sometimes called informal system.
designated receiving water	The Duwamish River, Puget Sound, Lake Washington, Lake Union, Elliott Bay, Portage Bay, Union Bay, the Lake Washington Ship Canal, and other receiving waters determined by the Director of SPU and approved by the Washington State Department of Ecology (Ecology) as having sufficient capacity to receive discharges of drainage water such that a site discharging to the designated receiving water is not required to implement flow control. SMC 22.801.050.
engineering	Generic term for SPU engineering staff.
Consent Decree	The July 2013 agreement between the City and the U.S. Environmental Protection Agency (EPA), Department of Justice, and Ecology to reduce sanitary sewer overflows (SSOs) and combined sewer overflows (CSOs). It includes the opportunity to integrate stormwater control into the plan for CSO control. See CSO Reports & Requirements.
drainage system	A system intended to collect, convey, and control release of only drainage water. The system may be either publicly or privately owned or operated, and the system may serve public or private property. It includes components such as pipes, ditches, culverts, and drainage control facilities. Drainage systems are not receiving waters. SMC 22.801.150.
drainage water	Stormwater and all other discharges that are permissible pursuant to SMC subsection 22.802.030A. SMC 22.801.150.
Washington State Department of Ecology (Ecology)	The Washington State department that oversees receiving water discharges of wastewater and stormwater. EPA has delegated authority to enforce the Clean Water Act and to administer the National Pollutant Discharge Elimination System (NPDES) permit program to Ecology.
flow control	Controlling the discharge rate, flow duration, or both of drainage water from the site through means such as infiltration or detention. SMC 22.801.070.
flow control facility	A drainage control facility for controlling the discharge rate, flow duration, or both of drainage water from a site. SMC 22.801.070.
flow control structure	See Standard Plans 270 and 272.
force main	Discharge pipe of a pumping station.

Term	Definition
green stormwater infrastructure (GSI)	Distributed stormwater best management practices (BMPs) that use infiltration, filtration, storage, or evapotranspiration or provide stormwater reuse (SMC 22.801.080).
guidelines	Advice for preparing an engineering design. Guidelines document suggested minimum requirements and analysis of design elements to produce a coordinated set of design drawings, specifications, or lifecycle cost estimates. Design guidelines answer what, why, when, and how to apply design standards and the level of quality assurance required.
inlet	An inlet is a grated structure that conveys surface drainage to an off-line structure such as a catch basin.
main (or mainline)	Publicly maintained pipe system, typically 8 inches or larger in diameter for sewers and 12 inches or greater in diameter for stormwater and located in streets or easements. SPU has three formal types of mains: 1) pipe sewer combined (PS) is a combined sewer, 2) pipe sewer sanitary (PSS), and 3) pipe storm drain (PSD).
maintenance hole	Sometimes abbreviated as MH. Also commonly referred to as manhole. Structure used on mainlines for maintenance and inspection and for change in pipe size or in horizontal or vertical direction.
municipal separate storm sewer system (MS4)	Municipal separate storm sewer system (MS4) is a publicly owned system designed to collect or convey stormwater, such as storm drains, pipes, or ditches. MS4 is not a combined sewer or part of a sewage treatment plant.
natural drainage system	A form of GSI. Natural or constructed rain gardens or swales.
NPDES permit	An authorization, license, or equivalent control document issued by EPA or Ecology to implement requirements of the NPDES program. SMC 22.801.150. (Waste Discharge for CSOs and Municipal Stormwater Discharge for Stormwater).
Operations	Generic term for SPU staff responsible for operations and maintenance (O&M).
outfall	Generally, the point of discharge to a receiving water. Can be discharges from a storm drain or from a combined sewer. This also may be a discharge to groundwater via underground injection control (UIC).
outlet	Generally, the point of discharge from a structure (e.g., catch bask) or open stream.
pipe sewer combined (PS)	Public combined sewer pipe designed to carry both wastewater and drainage water. Also called combined sewer main or pipe.
Public sewer system	The sewer facilities owned and maintained by the City or other agencies having jurisdiction (e.g., Valley View Sewer District, Southwest Suburban Sewer District, King County), or any sewer or drainage facilities acquired or constructed by such agencies. 21.16.00 SMC.
pipe storm drain (PSD)	Part of the public drainage system that is wholly or partially piped and designed to carry only drainage water. 22.801.180 SMC. Also called main or pipe.
pipe storm drain detention	Detention facility located within the right-of-way (ROW) for street drainage that SPU is responsible for maintaining. Normally these are large-diameter pipes. See Standard Plan 270. Also called detention pipe.
receiving water	The surface water, such as a creek, stream, river, lake, wetland, or marine water or groundwater receiving drainage water. Drainage systems and public combined sewers are not receiving waters. SMC 22.801.190.
pipe sewer sanitary (PSS)	Public sanitary sewer pipe that conveys wastewater and is not designed to carry drainage water. Also called sanitary sewer main or pipe.
sanitary sewer overflow (SSO)	A discharge of sanitary sewage.

Term	Definition
service drain (or lateral)	A privately owned and maintained drainage system that conveys only stormwater runoff, surface water, subsurface drainage, and/or other unpolluted drainage water. Service drains include conveyance pipes, catch basin connections, downspout connections, detention pipes, and subsurface drainage connections to an approved outlet. Service drains do not include subsurface drainage collection systems. SMC 22.801.030.
side sewer (or lateral)	A privately owned and maintained pipe system that is designed to convey wastewater and/or drainage water to the public sewer system or approved outlet. This includes the pipe system up to, but not including, the tee, wye, or connection to the public main. SMC 21.16.030.
System Operations, Planning, and Analysis (SOPA)	SOPA conducts flow monitoring, weather, and impact forecasting; system performance monitoring; strategic operations; and data stewardship for SPU's CSO, wastewater pump stations, groundwater, and surface water drainage facilities and monitoring points.
standards	Drawings, technical or material specifications, and minimum requirements needed to design a particular improvement. A design standard is adopted by SPU and generally meets functional and operational requirements at the lowest life-cycle cost. It serves as a reference for evaluating proposals from developers and contractors. For a standard, the word must refers to a mandatory requirement. The word should is used to denote a flexible requirement that is mandatory only under certain conditions. Standards appear as underlined text in the Design Standards and Guidelines (DSG).
trenchless technologies	Technologies, such as pipe-bursting and pipe lining, are methods of rehabilitating pipes to extend useful life and do not require digging a trench to lay a pipe.
stormwater	Stormwater is runoff during and following precipitation and snowmelt events, including surface runoff, drainage, and interflow. SMC 22.801.200.
wastewater	Wastewater is a comprehensive term, including industrial waste, sewage, and other polluted waters, as determined by the Director of Health or Director of SPU. SMC 22.16.030.
water quality	A term used to describe the chemical, physical, and biological characteristic of water for its suitability for a particular purpose.
water quality treatment	Method of pollutant removal that includes sedimentation, settling filtration, plant uptake, ion exchange adsorption, and bacterial decomposition.

8.2 GENERAL INFORMATION

SPU owns and operates many types of stormwater, wastewater, and combined sewer facilities. King County owns and operates many of the largest pipes in the system and the sewer treatment plants, including wet-weather only treatment plants. Both King County and the City are responsible for reporting and controlling different CSOs from the system. Agreements between King County and SPU are available at the City Clerk's office Removed for Security

SPU regulates side sewers, including service drains, for construction on private property and has a memorandum of agreement with SDCI to provide review, permit, and inspection services. Since approximately 2001, SPU has maintained all records of side sewer repairs and installations digitally. SPU maintains the historical side sewer cards and plats on the 48th floor of the Seattle Municipal Tower (SMT). Refer to How to Read a Side Sewer Card for more information.

Elements within SPU's drainage, wastewater, and combined sewer network include infrastructure for collection and conveyance, storage, and treatment. Refer to GIS and Maximo data fields for asset descriptions. SPU adds data definitions to the GIS metadata on an ongoing basis.

8.2.1 Comprehensive Plans, Codes, and Policies

The guiding policy documentation for SPU drainage and sewer infrastructure is the individual comprehensive plans for each utility. The following are the most current policy sources for the DSG:

- City of Seattle 2004 Comprehensive Drainage Plan, Section 3, General Policies.
- City of Seattle 2006 Wastewater System Plan (Not formally adopted through City Council but is the best available plan for wastewater system). This is available through the line of business (LOB).
- Seattle Municipal Code (SMC) for stormwater and side sewers are written on multi-year cycles. Technical details supporting the codes are written and implemented through Director's Rules.
  - Side Sewer Code, Title 21.16
  - Requirements for Design and Construction of Side Sewers (Drainage and Wastewater Discharges Directors' Rules SDCI 4-2011/SPU 2011-004)
  - Side Sewer Code Enforcement Directors' Rules SDCI 5-2011/SPU 2011-005
  - Stormwater Code, Title 22.800
  - Stormwater Manual and Appendices A through I, Directors' Rules SDCI 17-2017/SPU drainage and wastewater (DWW) 200
- July 2013 Consent Decree entered into by the City with the U.S. Environmental Protection Agency (EPA), Department of Justice, and the Washington State Department of Ecology (Ecology) to reduce sanitary sewer overflows (SSOs) and CSOs into the City's receiving water bodies. Some key points about the history and desired outcome of the Consent Decree include:
  - A Long-Term Control Plan has been developed by the City in accordance with Section V.B. of the Consent Decree
  - Additional remedial measures for eliminating or reducing the City's CSOs may be included in the Supplemental Compliance Plan developed and implemented in accordance with Section V.B. of the Consent Decree
- SPU Strategic Business Plan 2018 to 2023. A new Plan will be published in quarter one of 2021, covering 2021 to 2026.

For more information, see SPU's Policies, Procedures & Other Rules.

Tip: *Often the easiest place to research code and rules is the SDCI website. City of Seattle Comprehensive Sewer and Drainage Plan 1973, often referred to as the Wayne Greer Plan, is also helpful for design.*

8.2.2 System Maps

SPU storm drainage, wastewater, and combined sewer system maps are available from:

- GIS Removed for Security
- GIS public-facing water and sewer maps are less complete records but can be useful when communicating with the public
- Base Maps
- SPU GIS Mapping Counter (SMT 47th floor)
- CSO control facilities operations and maintenance (O&M) folders (SMT 44th floor)
- SPU/King County wastewater sewer/drainage topography maps (SMT 45th floor)
- SDCI Side Sewer and Storm Drainage Information desk (SMT 20th floor), side sewer cards are available there
- Side sewer plats, referenced on the backs of the historical side sewer cards, are available for research on the 48th floor of SMT
- King County Wastewater Treatment Division website

Removed for Security

8.3 GENERAL REQUIREMENTS

The design engineer must be familiar with City of Seattle Standard Specifications and Plans, SDOT rules, permitting requirements and rules, SMCs for stormwater, grading and environmental critical areas, and industry standards.

8.3.1 Standard Specifications and Plans

Each design should reflect City Standard Specifications and Plans. When modifications to standards are needed, they should be shown in the contract drawings and, if required, as special provisions in the project manual.

8.3.2 Regulations

All drainage and wastewater facilities must be built to the applicable City, state, and federal guidelines.

Table 8-1 lists the relevant City regulations for drainage and wastewater facilities. National Pollution Discharge Elimination System (NPDES) permits issued to jurisdictions in Washington require that those jurisdictions have stormwater management requirements deemed either equivalent to those in Ecology's 2019 Stormwater Management Manual for Puget Sound or adopt Ecology's Stormwater Manual. The City 2016 Stormwater Code and related Director's Rules were granted NPDES equivalency in 2015. The City Stormwater Code was made effective January 3, 2016. Draft 2021 code revision is available and projects should reference codes that will be in place for the start of construction.

There will be instances where permits are not required but regulations must still be followed, including work on stormwater, grading, and environmental critical areas in the ROW.

Table 8-1
City Regulations for Drainage and Wastewater Facilities

Title	Document
City of Seattle	
City Standard Specifications and Plans	City of Seattle Standard Specifications for Road, Bridge, and Municipal Construction and the Standard Plans for Municipal Construction, current edition
Environmentally Critical Areas Code	Environmentally Critical Areas Code administered by SDCI
Noise ordinance	Noise abatement, SMC 25.08
Pavement opening and restoration	City of Seattle pavement opening and restoration rules
Seattle Streets Illustrated/Right-of-Way Improvements Manual	SDOT Director's Rule
Seattle Fire Code	International Fire Code with City of Seattle amendments
Seattle Land Use Code	Seattle Land Use and Zoning Code, SMC 23
Seattle Street Use Code	Street Use Code, SMC 15
Shoreline Master Program	Shoreline Master Program from SDCI
Side Sewer Code	Side Sewer Code (SMC 21.16) SDCI/SPU Requirements for Design and Construction of Side Sewers Directors' Rule 2011-04 (Drainage and Wastewater Discharges)
Stormwater Code*	City of Seattle Stormwater Code (SMC 22.800–22.808) Stormwater Manual Directors' Rule DWW 200
Grading Code	Grading Code (SMC 22.170)

Title	Document
Washington State	
NPDES	Construction Stormwater General Permit
Consent Decree	As of July 2013, Seattle has entered into a historic agreement with the U.S. Environmental Protection Agency (EPA), Department of Justice, and the Washington State Department of Ecology to reduce sanitary sewer overflows (SSO) and combined sewer overflows (CSO) into Seattle's receiving water bodies. Some key points about the history and desired outcome include Long-Term Effort, Landmark Agreement, and Commitment to protect and improve water quality in local waterways and Puget Sound.

8.3.3 Industry Standards and other Agency Standards

Table 8-2 provides a partial list of industry standards for drainage and wastewater pipes, while Table 8-3 provides a list of standards from other relevant agencies. Before purchasing any standard materials document, check with the SPU Materials Lab, which may be able to provide a copy of the needed document.

Table 8-2
Partial List of Industry Standards and Specifications

Organization	Standard	Description
Vitrified Clay Pipe (VCP)		
ASTM	C12	Installing VCP lines
ASTM	C301	Test methods for VCP
ASTM	C425	Specification for compression joints for VCP and fittings
ASTM	C700	Specification for VCP- Extra Strength, Standard Strength, and Perforated
ASTM	C828	Test methods for low-pressure air test of VCP lines
ASTM	C896	Terminology relating to clay pipe
ASTM	C1091	Test methods for hydrostatic infiltration and exfiltration testing of VCP lines
Ductile Iron Pipe (DIP)		
ANSI	21.51	DIP Centrifugally Cast in Metal Molds or Sand-Lined Molds, for water or Other Liquids
ANSI	21.53	Covering DI compact fittings for 350 psi water pressure plus water hammer
AWWA	C151	DIP, Centrifugally Cast, for Water or Other Liquids
High-Density Polyethylene (HDPE) Pipe		
ASTM	D3350 F2648	Corrugated smooth wall
ASTM	D3350 PE 3608 / PE 3408	Smooth wall

Organization	Standard	Description
Polyvinyl Chloride (PVC) Pipe		
ASTM	C900	PVC
ASTM	D 2241	Pressure rated PVC pipe
ASTM	D3034	PVC pipe and fittings
ASTM	F789	PVC pipe
Concrete Pipe		
ASTM	C76	Reinforced Concrete Culvert, Storm Drain and Sewer Pipe
Polypropylene Pipe		
ASTM	F2736	6" to 30" Polypropylene (PP) Corrugated Single Wall Pipe and Double Wall Pipe
ASTM	F2764	30" to 60" Polypropylene (PP) Triple Wall Pipe and Fittings for Non-Pressure Sanitary Sewer Applications
Other		
ACI	318-95	Building code requirements for reinforced concrete
ACI	350R-89	Environmental engineering for concrete structures
ADA	Part 36	American with Disabilities Act guidelines for buildings and facilities
IBC		International Building Code
UPC		Uniform Plumbing Code 2009
SBC		Seattle Building Code
UBC		Uniform Building Code
UFC		Uniform Fire Code
MIA	Handbook	Reinforced Masonry Engineering Handbook, J.E. Amrhein, 5th edition
AISC	Manual	Manual of Steel Construction or Load Resistance Factor Design

Acronyms and Abbreviations

ACI: American Concrete Institute
ADA: Americans with Disabilities Act
AISC: American Institute of Steel Construction
ANSI: American National Standards Institute
ASTM: formerly American Society of Testing and Materials; now known as ASTM International
AWWA: American Water Works Association
IBC: International Building Code
MIA: Masonry Institute of America
psi: pounds per square inch
SBC: Seattle Building Code
UBC: Uniform Building Code
UFC: Uniform Fire Code

Table 8-3
Other Agency Standards

Organization	Standard
Ecology	Stormwater Management Manual for Western Washington
FHWA	Urban Drainage Design Manual, Current Edition HEC-22
FHWA	Hydraulic Design of Highway Culverts, HDS No. 5
FHWA	Hydraulic Design of Energy Dissipaters for Culverts and Channels, HEC-14

Organization	Standard
WSDOT	Standard Plans
WSDOT	Hydraulics Manual, M 23-03

Acronyms and Abbreviations
Ecology: Washington State Department of Ecology
FHWA: Federal Highway Administration
WSDOT: Washington State Department of Transportation

8.4 BASIS OF DESIGN

The basis of design documentation, both the basis of design report and the basis of design plan sheet, communicate design intent to plan reviewers and future users of a facility. By documenting the basis of design in the plan sheet and archiving it with the project record drawings (as-builts), future staff can review design decisions. See *DSG Chapter 1, Design Process* for requirements.

8.5 DESIGN PROCESS

See *DSG Chapter 1, Design Process* for details regarding the design process and a summary of the deliverables for a typical pipeline project. Stormwater code requirements should be identified prior to scoping.

8.6 OTHER DESIGN DISCIPLINES

This section presents design considerations specific to drainage and wastewater projects by design discipline. For general design considerations that apply to all SPU infrastructure projects, see *DSG Chapter 4, General Design Considerations*.

8.6.1 Structural

A civil engineer may design common structural elements. These elements include headwalls; retaining walls; vaults; pipe encasements, concrete caps; foundations; footings; concrete channels; shear, sluice, and flap gates; multiple-access top slabs for maintenance hole (MH) covers, pipe loading analysis, and weir walls.

Removed for Security

8.6.2 Landscaping

See section 4.10 of *DSG Chapter 4, General Design* Considerations for specific guidelines regarding landscaping and irrigation.

8.6.3 Instrumentation and Control

Instrumentation and control (I&C) is also referred to as supervisory control and data acquisition (SCADA). I&C encompasses common electrical design elements for drainage and wastewater infrastructure. These design elements include flow monitors, level sensors, and local control panels. Consult SOPA for equipment and monitoring requirements. Some SPU drainage and wastewater systems have controlled gates. For detailed information on this topic, see *DSG Chapter 10, I&C (SCADA)*. Any project with instrumentation must follow the commissioning process. For information on the commissioning process, refer to the Infrastructure Commissioning Guidelines.

8.6.4 Pump Stations

See *DSG Chapter 11, Pump Stations*. Any project with pump station improvements must follow the commissioning process. For information on the commissioning process, refer to the Infrastructure Commissioning Guidelines.

8.7 STORM DRAIN DESIGN

This section describes standards and guidelines for SPU owned and operated drainage systems. Where standards and guidelines for sanitary sewers and combined sewers are the same, they appear in this section. Guidelines specific to sanitary sewer design are presented in DSG section 8.8.

Many reference materials are available for storm drain design, including textbooks and design manuals published by various public agencies. This chapter provides a general understanding of storm drain design as well as some significant SPU storm drain design standards. Generally, this chapter refers designers to design criteria that are available in various City-published documents and only emphasizes the most significant design considerations and some of the rationale behind those considerations.

For standards on storm drain structures and materials, see the City Standard Specifications and Plans. This chapter provides some SPU-specific background for these standards. For drainage infrastructure guidelines, see City CAM 1180 (**Appendix 8D - CAM 1180**). CAM 1180 was developed to identify concerns for SPU drainage review. SPU coordinates updates to CAM 1180 with SDOT.

For stormwater code requirements, including requirements for flow control facilities, stormwater quality treatment, or on-site stormwater requirements, see the Stormwater Code and related Directors' Rules. This chapter provides guidance on SPU preferences when the Stormwater Manual allows for design decisions. See section 4.12 of *DSG Chapter 4, General Design* Considerations for resources and links for stormwater code compliance.

Resources for storm drain design include:

- Section 4.12 of *DSG Chapter 4, General Design Considerations*
- BMPs as described in Volume 3 of the Stormwater Manual may be appropriate or provide design guidance for incorporation into DWW LOB projects, even when not required by the stormwater code

8.7.1 Hydrologic and Hydraulic Evaluation

Hydrologic and hydraulic analysis is the foundation for sizing storm drain facilities. For storm drain design, the hydrologic evaluation process estimates runoff peak flows, volumes, and durations using many different variables and storm conditions. Prior to conducting any detailed stormwater runoff calculations, consider the overall relationship between the proposed project site and the runoff it will create. The choice of a hydrologic analysis method depends on the types of facility being designed (conveyance, flow control, or water quality) and the required performance standard. Some of the data required include watershed characteristics such as size of the tributary area/basin delineation, soil type, land cover, rainfall/precipitation data, topography, conveyance network, and boundary condition. Section 7.5.3 of *DSG Chapter 7, Drainage and Wastewater System Modeling* provides additional information regarding hydrology and hydraulic modeling.

The City has a long history of rainfall measurement, and SPU maintains rain gauges throughout the City. Although rainfall patterns for short-duration storms do not differ across the City, medium- and long-duration storm patterns do vary. In general, use of rainfall data collected at SeaTac is not applicable to rainfall within the City.

Refer to *DSG Chapter 7, Drainage and Wastewater System Modeling* for information on drainage and wastewater modeling requirements. See Appendix F of the Stormwater Manual for modeling requirements for specific stormwater BMPs and hydrologic analysis and design. Appendix F includes summaries of rainfall records in the City and general guidance on hydrologic evaluation, in addition to modeling guidance to meet the requirements of the stormwater code.

Generally, use the five-minute time step in the rainfall record. When there is uncertainty about the correct method of analysis or the correct storm record, or time step to use, confer with the Investigations and Modeling section of the DWW LOB.

The type of hydrologic analysis selected must be appropriate for both the drainage basin and the type of facility being designed. Selection of rainfall data is critical to sizing any drainage asset and should be reported in the options analysis. When not using continuous rainfall data approved by the Investigations and Modeling section, conservative sizing based on storm intensity, duration, and shapes should be presented in the options analysis to allow consideration of the worst-case scenario for impacts and costs.

For system modeling, continuous modeling simulation is preferred. For design of most BMPs described in the Stormwater Manual, continuous modeling simulation is required.

For storm drain design of single upstream pipe segments, the rational method is generally appropriate for speed and ease of use. Intensity duration frequency curves provided in Appendix F of the Stormwater Manual can be used for analysis of single upstream pipe segments and surface flows, such as gutter flow calculations. Appendix F of the Stormwater Manual also provides direction on time of concentration calculations and five-minute intensity data for simple design choices. The rational method is not typically used when backwater constraints are part of the analysis.

Single-event modeling using short-, medium- and long-duration storm data is generally appropriate for storm drainpipe design and is available in Appendix F of the Stormwater Manual. When using single-event storm data, apply all three duration types with the project-determined drainage basin and options prior to selecting the design single event storm. The design engineer should document the selected single-event storm with details explaining why it

is the conservative design choice. In some instances, single-event modeling may include cases in which the calculation must account for backwater from the lakes. The Stormwater Manual includes high-water surface elevations. Backwater must be considered in design of facilities impacted by any constraint.

For storm drain systems discharging to tidal waters, modeling hydrologic and hydraulic data should rely on continuous simulation of rainfall and tide. Although Appendix F of the Stormwater Manual allows for substituting continuous data with matching the peak observed tidal elevation during a single storm event, this approach can lead to oversizing of the drainage system. Thus, SPU recommends continuous modeling. For public systems, Appendix F of the Stormwater Manual requires analysis of sea level rise by adjusting the tidal record incrementally. Report the modeled incremental steps from sea level rise in the options analysis.

Tip: *The U.S. Army Corps of Engineers (Corps) controls levels in Lake Washington, Lake Union, Portage Bay, and the Ship Canal and maintains levels approximately 2 feet (ft) higher in the summer.*

For hydraulic requirements for bypassing existing drainage, refer to section 3.11 of *DSG Chapter 3, Design for Construction*.

When analyzing an existing drainage system instead of designing a new system, be aware of the variety of storm return frequencies and methodologies used in design of the drainage system. The partial separation projects of the 1970s used the rational method and a 10-year return frequency storm for major storm drains and a 5-year return frequency storm for side street storm drains. More recent projects have used a 25-year return frequency storm. The combined sewers were designed for 15 gallons per minute per acre. In the 1980s, combined sewer facilities were often designed using a suite of design storms developed by Metro (now King County). Each design choice was linked to the rainfall data analysis of its time. Thus, there is a wide range of hydrologic and hydraulic data and methodologies to consider when evaluating an existing drainage system.

For hydraulic analysis of the pipe system, a Manning's "n" value of 0.013 is appropriate. Consult textbook "n" value tables for other values. Laboratory results for a single pipe run should not be used since they do not account for transitions at fixtures, connections, and MHs or pipe maintenance practices.

8.7.2 Drainage Basins

Stormwater in the City flows to a number of locations depending on the basin in which it originates. To define a drainage basin for a storm drain, track the route of existing piped systems using trace tools and do not assume that piped flow follows topography. In many parts of the City, the piped drainage path is vastly different than the path stormwater would flow naturally. One reason for this is that design of the combined sewers directed flows toward salt water and locations where currents would provide greater dispersion of the combined sewer flow at outfalls when feasible.

To define the drainage basin, establish the total topographic tributary area based on terrain and the built drainage conveyance. Locate and identify control points within the drainage system, especially those that divert flows. The grading of the roadway is an integral part of drainage conveyance, so checking flow direction changes at intersections can be critical.

See *DSG Chapter 7, Drainage and Wastewater System Modeling* for considerations on effective impervious surfaces in a drainage area and on selecting boundary conditions.

Drainage basins are scalable depending on the problem being examined and can vary between options considered. In a drainage system, the size of a drainage basin ranges from very large (for instance Lake Washington south of the ship canal) to a single catch basin defining a sub-basin.

Tip: *The Longfellow creek drainage basin, for instance, can be difficult to define. Combined sewers crossing the eastern ridge top can increase the basin area by one third and storm drains crossing the western ridge top can decrease the basin area by one third. Different conditions and assumptions about inlet and pipe capacity vary and leaves on grates and CSOs can change the contributing basin area by up to a thousand acres.*

8.7.3 CAM 1180 Design Guidelines for Public Storm Drain Facilities

This section contains some supplementary information on guidelines for design of the public storm drain system. See **Appendix 8D - CAM 1180** for the published guidelines in CAM 1180 Design Guidelines for Public Storm Drain Facilities. This guidance summarizes requirements for common storm drain extensions, flow control required by the stormwater code, and standard street drainage functions. CAM 1180 provides a dual function of providing engineers written guidance on common drainage elements and providing a framework for SPU plan reviewers to consistently evaluate both standard drainage and common alternatives. CAM 1180 is not applicable to all SPU Capital Improvement Program (CIP) projects, but it should provide a starting point for design. These guidelines are reviewed by SDOT when updated and are referenced as guidance for street functions in Seattle Streets Illustrated. The following sections follow the primary headings and structure in CAM 1180 and only provide supplementary information to the sections in CAM 1180.

For GSI design guidance, see the Stormwater Manual and **Appendix 8C - GSI Manual**.

8.7.3.1 Determine the Point of Discharge

CAM 1180 states that SPU's general preference is to connect private properties to the public drainage system instead of the combined sewer system and for piped connections over surface flows. However, this is a complex decision that SPU makes based on a wide variety of laws, rules, regulations, existing agreements, planning documents, and capacity evaluations. SPU retains the authority to select an appropriate discharge point, except to the sanitary sewer system, which is not part of the drainage system. The DWW LOB can advise when determining a point of discharge.

If no surface water or drainage system discharge point is available, on-site infiltration can be used if soil conditions allow and effective stormwater treatment can be provided prior to a deep groundwater discharge point. See the Stormwater Manual for requirements for deep infiltration and **Appendix 8C - GSI Manual** for additional design guidance for infiltrating BMPs and underground injection control. Ecology has a separate permitting program for underground injection control.

8.7.3.2 Grade Roadways and Alleys to Collect Drainage

Grading of the ROW is the primary method in which the City conveys stormwater. Always check the route of flow that is not collected into a pipe or ditch system and how it affects the street system, property, and the environment. Grade to keep stormwater within the ROW for collection and to convey the stormwater on a pathway that is away from private property. There are some exceptions at creeks and other watercourses that should be discussed with the DWW LOB representative. Do not grade to create closed contours. If a closed contour in the roadway or alley exists within the footprint of the project, it must be regraded to remove the closed contour.

Standard longitudinal concrete grades of 0.5% for newly constructed streets and asphalt grades of 1% are based on what is considered feasible to eliminate ponding using construction methods in City Standard Specifications. City Standard Plan 400 shows a standard cross section. There are many existing streets in the City that do not meet the minimum standards provided above. SPU interests in grading include the following concerns:

- Grade to maintain the distribution of flows between drainage sub-basins, except when the downstream impacts are evaluated and are acceptable. Grading changes that divert flows from one water body or system to another should be analyzed for conformance to the Stormwater Code. Grading changes that diverts flows from one pipe to another should be analyzed for capacity and potential damage from both downstream and upstream impacts.
- Grade to control flooding and protect property.
- Grade to minimize nuisance ponding in the street and related complaints. Nuisance ponding is a larger concern where pedestrians are more likely to be impacted. This includes streets without parking lanes or planting strips and streets near bus stops.
- Maximize the use of surface flow lines to minimize adding drainage infrastructure and the associated long-term maintenance costs.
- Grade towards the roadway and maximize maintenance access to the drainage system. Grates outside of the roadway can be safety and liability concerns in addition to being difficult to maintain.
- Grade to maintain clear walking paths and ensure that low points are outside marked and unmarked crosswalks. Grade to maintain flow around curb returns at a minimum 0.5% for concrete gutters or pavement. Follow Americans with Disabilities Act (ADA) guidance on casting placement.

8.7.3.3 Locating Catch Basins and Inlets

Within the original extents of the City (before many annexations), drainage collection structures like catch basins and inlets were placed upstream of crosswalks. CAM 1180 continues to require that catch basins and inlets be located for drainage collection upstream of crosswalks. This approach is more for street function and public expectations than preventing flooding. This approach is helpful for maintenance of drainage collection structures.

Background considerations for determining the locations of catch basins and inlets include:

- SPU crews cannot respond to all flooding and ponding locations during major rainstorms. Thus, when locating drainage collection structures (**Appendix 8B - Useful Figures and Concepts**), consider the likelihood of property damage or road closures in

the case of failure of the drainage collection structure. Abrupt grade changes in the gutter line and heavy leaf coverage in the fall can increase this likelihood.

- Drainage collection structures must be located outside of the walking path, since the grates can be hazardous to pedestrian use. ADA includes some guidance on clear paths and Standard Plan 422K includes some clearances from curb ramps. Ponding within the walking path can also reduce safety by encouraging walkers to walk around the ponding, potentially outside of the crosswalk, marked or unmarked.
- In street zones with high pedestrian traffic and waiting, such as bus stops or light rail stations, splashes from a passing vehicle should be avoided.
- There is a substantial ongoing maintenance cost with each drainage collection structure, so any excess structures should not be installed except as required to meet these standards. If a low spot can be eliminated to reduce structures, that option should be evaluated. If a catch basin can be used for drainage collection, do not install an inlet connecting to a catch basin.
- Locations that require no-parking or other traffic control signage have increased long-term costs and street disruption during maintenance activity. This is most extreme on bridges and bridge-approach structures.
- Locate drainage collection with clearance from trees, which can be damaged during maintenance activities.
- Locate drainage collection on streets providing limited access or access to hospitals, schools, and similar essential facilities to maintain access during larger storm events.
- Locate castings outside of the vehicle wheel path to reduce noise and premature wearing of the casting.

A. Gutter Flow Calculations

Project decisions about analyzing gutter flow affect water ponding or spread on the roadway and the associated capital and maintenance risks and costs. Project teams must work with both SDOT and SPU to set project standards based on the street use and acceptable pedestrian impacts resulting from decisions about allowable flow spread. Calculations of depth and spread are required for new or reconfigured arterial streets, especially when the gutter is being relocated.

Most commonly, SDOT and SPU use the rational method and data from the WSDOT Inlet Spacing spreadsheet for determining depth and spread of flows. As a starting point for a project-specific standard, use the 10-year, five-minute storm intensity and assess the impact of allowing spread to one-half a travel lane. Assume rough pavement and an “n” value of 0.016 unless documenting a different roughness.

When calculating grate bypass flows, use care at intersections and do not add a bypass that diverts flow to a side street. Unlike highways, the urban street network often means that bypass flows should not be added to the flows at the next drainage collection structure because they rounded a corner at the upstream intersection. The reverse is also true, and bypass flows from side streets should be added if appropriate for the intersection grading.

Check for hydroplaning depths, which are not commonly encountered in the City street network.

Flow spread to one-half of a travel lane on an arterial street is generally appropriate for maintaining vehicle traffic during a storm, depending on the number of lanes. This spread is a starting point for analysis and discussion. Cases where one-half of a travel lane may be too much spread include:

- Areas of high pedestrian traffic with no protective parking lane or planting strip to provide separation of pedestrians from the splash
- Adjacent to bus stops, especially high capacity stops
- Narrow two-lane roadways
- Upstream of closed contours where allowing bypass flow to enter the sag location will increase the risk of actual flooding

Cases where constraining spread to one-half a travel lane may be unnecessarily strict include:

- Where a parking lane is provided
- Multi-lane roads where vehicles can avoid the flow by changing lanes or at least one wheel path is not in the calculated spread
- Where flow spread beyond one-half of a travel lane is minor, implying low benefit, and a cost benefit analysis determines that additional drainage collection structures are an unnecessary expense

When initial gutter flow analysis at one-half of a travel lane would require adding multiple catch basin structures between intersections and not at minor low points, a risk benefit analysis is required. Limiting spread to one-half of a traffic lane can add substantially to the project costs and to maintenance costs that come with adding drainage collection structures. The functional difference of limiting spread to one-half of a travel lane compared with one-half of a travel lane plus 6 inches, for instance, is not obvious, but the cost differential can be significant.

The impact of flow spread into a bike lane within the roadway should be evaluated separately and jointly between SPU and SDOT.

Refer to Standard Plans 260, 262, and 263 for City standards regarding grate installation. The standard grate frame at the face of a curb is 0.75 inches wide with an additional 1.5 inches of solid metal in the grate, for a total width of over 2 inches. This allows flow to bypass against the curb. This can be mitigated by using a through curb inlet in combination with the transition zone required in Standard Plan 260a. On many projects, pavement contractors have not constructed the drainage transition zone. If a true closed contour cannot be graded out and flows would overtop the curb and potentially flood private property, assess the impacts of both a 25-year and 100-year return storm.

Gutter flow on bridge structures has increased risks over surface roadways. It is difficult to maintain bridge drains (**Appendix 8B - Useful Figures and Concepts**), further complicating the analysis. Careful, early coordination with SDOT on geometry impacting gutter flow is required. See WSDOT's Hydraulics Manual for further guidance. The

following spreadsheets and computer programs are available to evaluate grate inflow capacity:

- WSDOT Excel spreadsheets for calculating grate inflow. These are based on procedures and examples in the WSDOT Hydraulics Manual.
- Detailed methods and charts for calculating gutter flow, grate inlet flow, and side inlet flow are included in FHWA's HEC 22 - Urban Drainage Manual. This reference is recommended for complex drainage situations beyond normal continuous gutter calculations.

Tip: *Carefully consider drainage entering or leaving at side streets by evaluating the intersection geometry. Bypass flow in charts and spreadsheets will be added along the main street being considered unless they are adjusted to delete at side streets. Actual bypass from intersecting streets will not be added unless the analysis is of the road network. Bypass analysis decisions can greatly increase the expense of the project and the long-term maintenance of the drainage system. It is important to document the boundary conditions adopted for the street network in addition to the drainage basin.*

8.7.3.4 Type of Catch Basin or Inlet to Install and Where to Use

SPU prefers catch basins over inlets because they are more reliable. Inlets and inlet connection pipes tend to clog more often. That is why the minimum slope for inlet connections is 5%, instead of 2%. In addition, maintenance of inlet connection pipes typically includes manually dislodging clogs in the pipe as opposed to using a Vactor truck to clean out a sump. This is why the pipe orientation and straightness requirements for inlet connection pipes allow for reduced flexibility during design and construction. For both catch basins and inlets with rectangular grates, the orientation of the connection pipe should allow for use of the longer dimension of the rectangular grated opening to align and insert the maintenance tool for cleaning. For catch basins, maintenance crews must be able to see, reach, and replace the trap from the opening.

SPU prefers a catch basin or inlet with a curb opening using a frame that meets specifications defined in Standard Plan 263. A curb opening provides some back up for grates clogged with debris or leaves. In addition, on City hills, collected flows sometimes bypass the grate because the flange requires that the edge of grate openings will be more than 2 inches from the face of curb. A curb opening helps to minimize this curb side bypass. Standard Plan 263b Alternative Inlet Hood should only be used in locations that clearly have a need for a larger through curb overflow and do not have an adjacent sidewalk (e.g., above landslide-prone slopes).

SPU prefers a large sump volume in a catch basin to reduce maintenance requirements. Annual inspections of catch basins are required and cleaning is triggered when sediment is within 18 inches of the outlet pipe. SPU requires a catch basin prior to discharge to conveyance pipes. These catch basins minimize sediment and floatable debris entering the mainline pipe system and provide a primary location for maintenance. Each catch basin should have a sump, trap, and an independent connection to the mainline pipe (combined sewer or storm drain). Privately owned catch basins may use a downturned elbow instead of the trap, per Standard Plan 267.

The WSDOT catch basins cannot be substituted into the SPU system, since the WSDOT standard design is catch basin to catch basin without a trap. Typically, where WSDOT, or another agency using WSDOT standards, discharges into an SPU maintained pipe, only the catch basin immediately upstream of the SPU pipeline is required to install a trap, per Standard Plan 267.

Alternate uses of a precast structure type from the standard plans may be appropriate for a project. However, instead of referencing the standard, it should be designated differently on the design drawings along with any required detail. For example, in some areas of flat and shallow pipes or ditches and culverts, a sump-to-sump connection may be the only feasible hydraulic connection. When using a type 241 catch basin structure as a junction box (JB), it is most likely not a catch basin for asset inventory purposes; it is definitely not for these purposes if a trap is not included. The design drawings should label the functional use of the structure. Remember, a catch basin in City drainage system requires annual inspection and a junction does not.

Catch basins can be a relief point in a surcharging system. Consider the hydraulic implications of flow entering or leaving the system at any location. If needed, SPU implements in-line elastomeric backflow prevention valves. Consult with Operations when considering including valves in a drainage design.

SPU does not allow private property to connect to any catch basin in the street. This is because the City's liability increases in the case of a backup that could be traced to clogging of the SPU catch basin.

Walls, even walls in the ROW owned by SDOT, should have catch basins separate from the street catch basin because of the risk of surcharging the wall in the event of catch basin failure.

SPU has allowed Seattle City Light (SCL) and SDOT to connect vault 2-inch sump pump drains to catch basins in the combined sewer basins only. Connections to street catch basins in storm drain systems are typically not allowed. Consult with the DWW LOB when considering connections by other City departments. SPU has also allowed SDOT or Sound Transit service drains (SD on design drawings indicates not owned by SPU) to connect to a street catch basin. Conditions under which this is allowed include:

- The contributing area is street surface that would normally have drained to the catch basin.
- Connecting pipe invert is 2 inches higher than outlet pipe invert, as shown on Standard Plan 240.
- Hole for connection pipe is 8 inches clear of existing piping.
- Hole for connection pipe is below cone section, a minimum of 2 inches clear of any structure joint, and below the corbeled (slanted or cone) section in any brick structure.
- 2-inch force main connections have a grade break to open channel flow prior to the connection and have a downturned elbow inside the catch basin.

SPU uses Standard Plan 267 for traps. This trap type is designed to trap sediment and floating debris and oil in a catch basin. A common issue with larger piping is that the trap requires more space. During design, consideration should be given to size the catch basin appropriately and provide adequate space for maintenance activities.

A. Grates

SPU's general design intent is to use standard grates whenever possible in the roadway, because standard products are easily replaced. Any grate identified on design drawings must be part of SPU's warehouse inventory. Missing grates are an urgent safety issue and crews must be able to replace them quickly. Check warehouse inventory for available grate choices that meet the design requirements but are not standard. ADA

compatible grates are an example. Approvals for non-standard grates that are not currently kept in the warehouse are very rare. Coordination with Operations, and warehousing is required to add non-standard grates to the inventory. Adding grates to the inventory is a high cost item and should typically be avoided. If a project proposes installing non-standard grates, discussion with Operations, warehousing, and SDOT may be necessary.

The City has used a wide variety of grates since the late 1800s. Grates in the early system were wood on sandboxes. In the early 1900s, round and rectangular slotted cast iron grates were favored. During the 1960s to 1980s larger cast iron, slotted grates were used. By the mid-1980s, ductile iron vaned grates became the industry standard because they capture high flows more efficiently. Vaned grates improve bicycle safety over the slotted grates and is now standard for use in roadways. See Standard Plan 266 for a vaned grate replacement for old type 164 inlets when the pavement is not being removed. Standard vaned grates have a flow direction indicated by an arrow on the casting. Bidirectional vaned grates are available in a limited number of sizes.

The vaned grate should not be used in behind-the-curb locations. A beehive grate, per Standard Plan 269, can be used in landscaping like bioretention. ADA compliant grates are required in any walking or joint-use path.

The herringbone grate of catch basin type 240b and type 241 may be used in alleys and parking lots. The herringbone is not ADA compliant and should not be used in bicycle paths, where the slot design can trap tires. Outside of designated walking paths but where pedestrians may still be present, the narrower openings of a herringbone grate can be preferable over larger opening in a vaned grate.

Most City streets are crowned and one grate for each side of the street can easily manage the total flow from a street. The simplest method to calculate grate capacity is using the Inlet Grate Capacity Calculator, which uses the weir equation for gutter flow and the orifice equation for sumps. Grate manufacturers may have laboratory test results on their website that will be more accurate than this calculator. The design engineer should account for the effect of debris on the actual capacity of the grate.

Many grates come with environmental messaging from the manufacturer. When reviewing product submittals, the design engineer should require that “drains to stream” be removed from the product messaging if the drainage is to the combined sewer or Puget Sound. Accurate environmental messaging on castings is helpful even though not required by City standards. Inaccurate messaging should be avoided.

8.7.3.5 Inlet and Catch Basin Connecting Pipes

The standard size of inlet connection pipe and catch basin connection pipe is 8 inches. SPU does not allow coring of an existing 8-inch pipe for an 8-inch connection pipe. When connecting a catch basin to an existing 8-inch pipe, use a 6-inch catch basin connection pipe.

To the extent feasible, SPU uses straight pipe connections between inlets and catch basins. The inlet connection pipe should exit the structure as shown in Standard Plan 250. This almost doubles the working space for maintenance to access the inlet connection pipe when the grate is removed.

SPU uses Standard Plan 261 for catch basin connections, as follows:

- **Type A connection** shows a public storm drain connecting to a catch basin using vertical bends with a maximum of 22.5° (1/16 bend) at each bend. There are no horizontal bends. Type A connections should be used with a square or round grate or casting. The shorter, straighter pipe is desirable for cost and future maintenance.
- **Type B connection** should be used when a rectangular grate opening is used. The outlet trap is under the grate and when the grate is removed for maintenance access, the longer length of the opening can be used, similar to inlet installations.

Each inlet and catch basin standard plan shows an allowable outlet pipe location for O&M purposes. When neither of the standard connections are feasible, alternatives should maintain trap accessibility by keeping it under the grate and maintain the grate orientation to the outlet pipe. For example, the 22.5° bends shown for the Type A connection in Standard Plan 261 can be reversed for connection to a storm drainpipe behind the curb. In this case the outlet pipe cannot connect to the center of the structure. The allowable outlet location needs to be slightly offset from the center.

Standard Plan 234 shows allowable vertical connections to mainline pipe. This type of connection can be considered when a catch basin connection cannot follow Standard Plan 261. This can be the case when the catch basin alignment is directly over, or close to directly over, the mainline. Since Standard Plan 234 includes a cleanout at the surface, the cleanout should be identified for SDOT's review of its impact on the ROW.

A. Inlet/Catch Basin Connection Pipe Material

Ductile iron pipe is preferred for inlet and catch basin connections. Inlets in particular are shallow and ductile iron can handle the impact loading. The SPU warehouse carries a C900-compatible tee for use with ductile iron pipe catch basin connections to existing mainline pipe. Standard Specifications section 7-08.3(4) Catch Basin Connections states that an additional 1-ft short section of ductile iron pipe is required at the connection to the cut-in tee as a transition to longer pipe sections. This is because directly connecting a longer section of ductile iron pipe can act as a lever on the tee and damage the mainline.

When corrosion from streetcar or light rail electrical systems or extremely corrosive soils are present, consider using polyvinyl chloride (PVC) pressure pipe (C900) with fittings instead of ductile iron pipe. For catch basin connections with multiple bends and awkward bedding situations, pressure pipe, as opposed to pipe per ASTM International (formerly known as American Society for Testing and Materials Standards) 3034, is preferred for increased rigidity. Blue C900 pipe should not be used, because it can be confused with watermain pipe. For inlet connections in a corrosive environment, Class 52 ductile iron pipe with a sand bedding, which provides some corrosion protection with the impact loading characteristics of ductile iron, can be used.

8.7.3.6 Mainlines – Pipe Storm Drains

See DSG section 8.7.4 for information regarding pipe storm drains (PSDs).

8.7.3.7 Maintenance Holes

See DSG section 8.7.5 for details regarding MHs.

8.7.3.8 Detention Pipe and Flow Control Structures

This section of CAM 1180 only addresses detention pipe required by the Stormwater Code, not for other detention purposes. Size the detention pipe and the flow control device assembly per the Stormwater Manual requirements (Standard Plan 270 Flow Control Structure with Detention Pipe and Standard Plan 272 Flow Control Device Assembly).

For maintenance purposes, SPU does not allow use of smaller diameter connection pipes to downsize the MH structures. The relative locations of the flow control access (standard MH ring and cover), ladder, flow control assembly, and shear gate lift handle must consider maintenance and inspection requirements. SPU inspectors want to be able to observe the assembly and function from the surface without entering the structure. Maintenance staff want to be able to lift the shear gate without entering the flow control structure. When someone needs entry, the ladder should be clear of obstruction from either the rod attachment to the shear gate or a secondary orifice.

SPU does not allow use of CMP for detention because of concerns about corrosion, lack of watertight design, and difficulty making future connections or repairs to CMP. The allowable flexible pipes (polypropylene or steel-reinforced polyethylene) are generally preferred due to cost if the flexible pipes can pass a deflection test, per Standard Specifications section 7-17.3(3)F. See Standard Specifications section 7-16.3(5)A for offline detention pipe. If using steel reinforced polyethylene pipe for detention, do not allow the steel ribs to be exposed to air or water to avoid corrosion. See the requirement for the manufacturer to factory install tees for all connections.

8.7.3.9 Culverts

See DSG section 8.7.6 Ditches and Culverts.

8.7.4 Pipe Storm Drain

PSD refers to the more formal drainage, not combined sewer, system in the City. Beginning in the 1950s new sewer networks were constructed with separate pipes conveying sewer and stormwater. The majority of the existing PSD was constructed after 1970. Many of those PSDs provided partial separation (also referred to as Forward Thrust projects). These mainline PSDs were designed for full separation of the drainage basin; although the PSD construction did not transfer private property drainage from a combined sewer to the PSD, it did transfer the street drainage system. The less formal drainage system of ditches and culverts in the City is described in DSG section 8.7.6.

PSD design must consider conveyance as one element of the drainage system. The design must provide and account for:

- Gravity drainage of the entire defined drainage basin
- Roadway grading and roadway drainage collection
- Flooding reduction and protection of property
- Protection of the natural environment, including all receiving waters and ravines
- Service needs for private properties, both existing and allowed development
- Future extensions upstream and downstream of any proposed project
- Provide for maintenance, repair, and rehabilitation of the PSD system
- Construction that does not relocate an existing problem to a new location

8.7.4.1 Pipe Size

PSDs must be a minimum of 12 inches in diameter. The drainage system must be sized for the full drainage basin based on the current or proposed zoning, whichever is greater, for the properties being developed. Design calculations and analysis must consider the flooding and property damage risks associated with moving an upstream drainage problem downstream by improving conveyance.

Even if the hydraulic calculations allow, larger pipes should not discharge into smaller pipes because this increases the risk of blockages.

PSDs are typically designed for full gravity peak flow with a 4% annual probability (25-year recurrence). For more information on requirements for hydrologic analysis, including tidal and lake backwater constraints, see Appendix F of the Stormwater Manual and DSG section 8.7.1 of this chapter.

8.7.4.2 Velocity

When a pipe is full flowing, minimum velocity must be 3 ft per second (fps) to facilitate self-cleaning during larger storms. Designing a system to allow lower velocities must be discussed with Operations because it will increase the required frequency of maintenance cleaning.

The effects of excess energy must be investigated whenever pipe velocity exceeds 10 fps. Velocities greater than 10 fps must have special provisions to protect against displacement of pipe by erosion and impact. High velocities also cause pipe abrasion and hydraulic jumps can cause system overflows or popping MHs. If pipe velocity exceeds 20 fps, determine the potential for hydraulic jump and design system to mitigate high velocity. Energy dissipation features may be required in these situations.

8.7.4.3 Pipe Slope

Pipe slope must generally follow the surface topography. Desired minimum pipe slope is 1%. Minimum pipe slope for all storm drains must be 0.5%. Typical exceptions to the slope requirements include:

1. Downstream system is shallower than 6 ft.
2. Surface topography is flat and pipe slope is the minimum allowable 0.5%.
3. Connection cannot be made unless pipe slope is less than 0.5%.

Tip: *SPU has accepted pipe slopes at 0% or reverse grade in some circumstances. Discuss with your supervisor and Operations as early as possible when slopes less than 0.5% may be necessary. Expect that mitigation for the reduced velocities and higher maintenance costs may be needed.*

Storm drains must be laid with a consistent slope between MHs.

LOB approval is required for bends. One horizontal or vertical bend may be allowed on storm drains with a maximum bend of 22.5° when access for cleaning is still available.

8.7.4.4 Cover

Storm drain mainlines must have at least 6 ft of cover over the top of the pipe, as shown in Standard Plan 030. This requirement allows a CB to properly drain with a 25-year hydraulic grade line (HGL) storm drain within the ROW.

Side sewers and service drains must be installed per Standard Plan 283. All pipes should be placed deep enough to drain the surrounding area and provide opportunities for adjacent properties to connect.

8.7.4.5 Hydraulic Grade Line

Any HGL that surcharges the pipe should be shown on the pipe profile with notes about the storm conditions responsible for the surcharge. Backwater from any downstream restraint must be identified in the design documentation and shown on the pipe profile. During peak flows with 4% annual probability (the 25-year design storm), it is generally acceptable to allow stormwater surcharge within MHs to a level not more than 4 ft from the surface or 1 ft below the lowest service elevation, whichever is lower. This level provides freeboard within the system. Figure 8-1 below illustrate these HGL requirements.

Figure 8-1
Hydraulic Grade Line Requirements

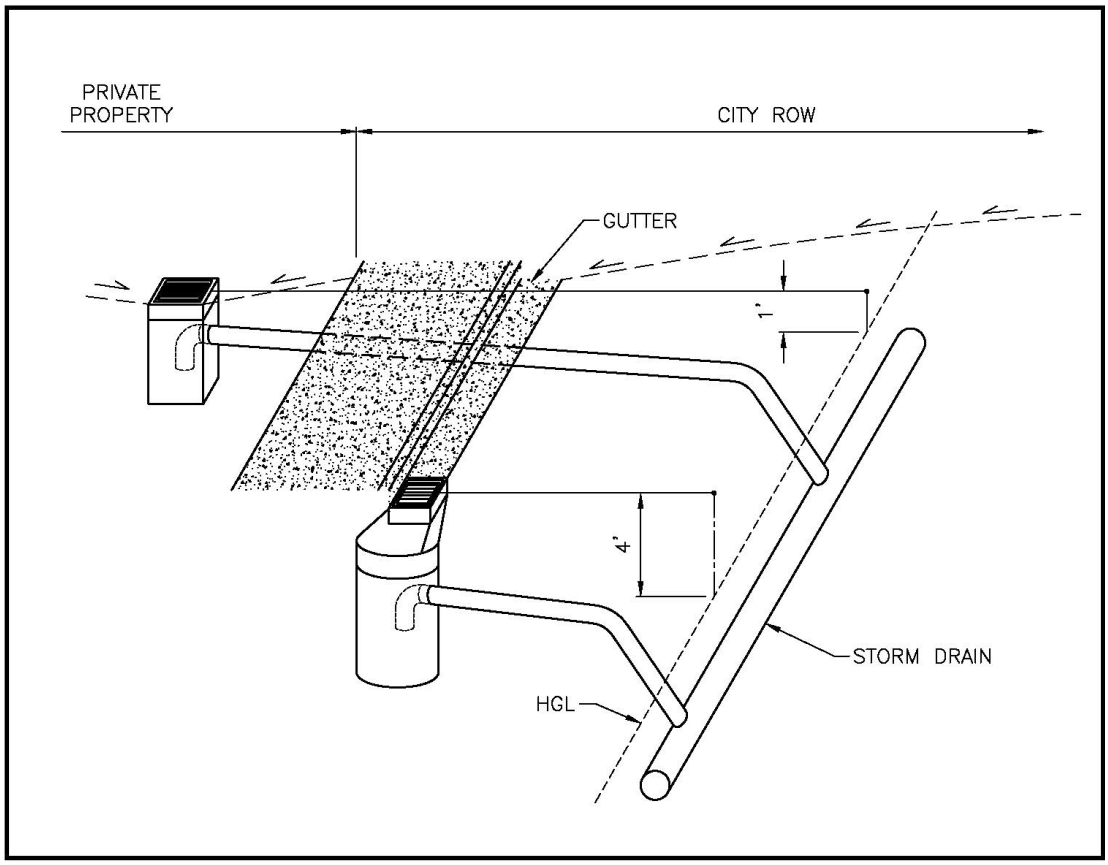

Acronyms and Abbreviations
HGL: hydraulic grade line
ROW: right-of-way

8.7.4.6 Profile

All DWW design drawings must have a pipe profile showing MH spacing, pipe size, pipe material, and HGL. Measurements must be per Standard Plan 010, which is to the center of the MH.

8.7.4.7 Alignment

Generally, pipes must be laid with straight alignment between MHs (**Appendix 8B - Useful Figures and Concepts**). However, for storm drains only, one bend is allowed horizontally or vertically. Bends are not allowed on any sewer or combined mains. The maximum bend allowed is 22.5°. Direction changes greater than 22.5° should be made within an MH. When proposing a pipe bend, discuss the use and location with Operations.

8.7.4.8 Pipe Material

Standard material used for storm drains includes clay and ductile iron. SPU has allowed PVC or high-density polyethylene (HDPE) based on evaluation of soil data and design criteria. Reinforced concrete pipe (RCP) and fiber-reinforced polymer (FRP) should be evaluated for large diameter pipes.

For detailed information on pipe materials, see Standard Specifications section 9-05. The standard specifications for pipe and bedding combinations are written for standard soil conditions, the trench width per Standard Plan 285, and depths between 4 ft and 20 ft of cover. Pipe loading calculations are required for pipes laid at depths greater than 20 ft. Pipes with less than 3 ft of cover require pipe loading calculations, including impact loading, unless using ductile iron pipe for pipes buried at a shallow depth. Pipe loading and deflection calculations are required for flexible pipe installations with internal diameter greater than 10 inches. Pipe deflection calculations are also required for ductile iron pipe 30 inches in diameter or greater. Deflection of ductile iron can generally be mitigated with bedding selection. Pipe loading calculations are required for trench sections wider than as shown in Standard Plan 285 and at depths less than 20 ft.

SPU uses the Pipeline Assessment and Certification Program (PACP) to evaluate pipeline condition with closed-circuit television (CCTV). Out-of-round pipe triggers additional maintenance requirements, so maintaining roundness for the design life of the pipe is desired.

Joint material selection is also a critical component in selecting pipe material. In general soil tight joints are not acceptable within the drainage system and can lead to pipe assessment issues. Sewer system materials should always be selected for watertight joints and fittings.

The drawings must show the design pipeline material on the profile, or if more than one material is allowed for contractor choice, on a note. Materials are not considered equivalent unless identified in the bid documents.

In general, SPU prefers ductile iron for stormwater pipe due to higher confidence in product installation and clay pipe for smaller diameter (8 inches to 24 inches) sewer pipe.

When selecting pipe material, consider the following:

- Constructability, including meeting all testing requirements, based on site conditions
- Construction and maintenance cost
- Maintenance activities that do not require new tools or development of new procedures
- Design life
- Ease of installation
- Live and dead loading
- Soil condition
- Ease of future tee installation

Allowable detention pipe materials are shown on Standard Plan 270.

For corrosion protection for drainage and sewer pipes, refer to *DSG Chapter 6, Cathodic Protection*. Note that pipe corrosion protection must account for the native soil resistivity, internal corrosion, especially with sewers, and the interfaces between different materials in contact with the pipe. Most of GIS's soil corrosivity layer was developed for shallower water mains. Thus, the soil corrosivity may be higher at drainage and wastewater depths. As a result, the designer should either request deeper soil tests or assume higher corrosive conditions than those represented in GIS.

A. Clay

PSD materials to evaluate include clay. Clay should generally not be used in shallow applications or at depths greater than 25 ft. Clay is often unpopular with contractors, when given a choice. Contact the National Clay Pipe Institute (NCPI) for guidance on pipe loading calculations. Refer to Standard Plan 215 for two flexible joints where loading conditions transition between trench loading and structure excavation at an MH.

B. Reinforced Concrete

Reinforced concrete has been widely used in SPU's DWW system and can be appropriate for storm drains. Reinforced concrete should only be used when issues of pipe permeability, abrasion, pipe bottom erosion and joint testing, and hydrogen sulfide have been addressed. Based on SPU's pipe inventory, concrete pipe generally wears faster than the older clay pipe, largely due to erosion of the pipe invert.

If exposed aggregate appears at the top of the pipe, the pipe may be degraded by hydrogen sulfide. This condition occurs in sewers with turbulence, low velocity, and heat. City temperatures have generally minimized pipe crown corrosion due to hydrogen sulfide, but this could change with increasing temperatures and changing climate.

In addition, concrete pipe has a history of joints not passing air tests, which can lead to significant delays in schedule while repairs are proposed, reviewed, approved, and implemented. Avoid bends in concrete pipe. Concrete pipes with diameters less than 12 inches that are not reinforced should generally not be used.

C. Ductile Iron

Corrosive soils are a concern with ductile iron. These corrosive issues have sometimes been addressed by specifying a thicker ductile iron pipe, providing more sacrificial material, requiring a sand bedding, sacrificial anodes, or both. See *Chapter 6, Cathodic Protection* for additional details. Polybags are not used around drainage or wastewater pipe because pinhole leaks can lead to collecting sewer/drainage water on the outside of the pipe and accelerate corrosion. Active corrosion protection is not appropriate, because DWW does not have a program to monitor active corrosion protection.

Standard Specifications section 9-05.3 requires a double cement mortar internal lining. Other lining materials should be considered for use in the sewer system or for pipes where highly erosive or corrosive flows or frequent cleaning is anticipated. For any lining material, all fittings should be equivalently lined. Unlined ductile iron pipe or fittings is unacceptable.

When pipes are installed in casings, the carrier pipe is most often restrained-joint ductile iron. Casing pipe can be steel, or for direct bury applications, polypropylene may be appropriate. See section 4.11 of *DSG Chapter 4, General Design Considerations* for additional details on casing pipe.

D. Plastics

Plastic pipe is another choice to consider in corrosive soils. PVC larger than 10 inches in diameter requires trench design for the surrounding in situ soils, which complicates the design. Design of flexible pipe other than PVC should consider future service connections. New connections on already installed HDPE are more complicated and most pipe should be designed to allow future service connections. There are various other flexible pipeline materials that are not currently in SPU's asset inventory or approved. Thus, expect design delays for coordination within SPU if proposing a new material. Note that any proposal to use flexible pipe is subject to deflection testing 30 days after backfill and prior to paving. Therefore, scheduling impacts must be addressed. There is a time lag factor associated with plastic materials.

Butt-welded, solid-wall HDPE is generally preferred for drainage on steep hillsides with the potential for landslides. Pipe anchoring on the upstream end with an allowance for thermal expansion/contraction is required.

Compound wall polyethylene, which are a pipe material that is easier to lay, have not been successfully used in the SPU drainage system. There are no standard specifications for these materials in Specification 9-05. Difficulties with CCTV inspection of these black pipe materials and maintenance, which cannot include cutting tools, have not been addressed. Any consideration to use these materials will need to be coordinated with both Operations and pipeline assessors. Designers must also assess the risk of delamination of compound pipe materials and the risk of relying on proprietary calculations for loading when considering use of these pipe materials.

For detention pipe with a diameter of 48 inches or less, polypropylene is generally the most cost-effective option. SPU has not accepted polypropylene for mainline pipe use.

E. Corrugated Metal

Corrugated metal pipe (CMP) is generally not used because of corrosion and the difficulty of new tee connections and obtaining water-tight construction. Galvanized material should not be in contact with stormwater.

F. Fiber-Reinforced Polymer

For larger diameter pipes, FRP should be considered. This pipe material is available in a range of larger diameters. It is highly corrosion resistant with sewer-tight joints and avoids many of the constructability and material wear issues associated with RCP. This pipe material is in the cost estimating guide, but SPU has not used this material frequently. King County Wastewater Treatment Division has installed pipe manufactured by Hobas and can be a resource for helping to evaluate pipeline material specifications and constructability issues.

8.7.4.9 Pipe Bedding

Pipe bedding must be installed per Standard Plan 285. Typical bedding types for SPU DWW pipes are:

- Concrete pipe: Class B with pea gravel bedding
- Clay pipe: Class B with Mineral Aggregate Type 22
- Ductile iron pipe: Class D select native, Mineral Aggregate Type 9 or sand bedding with Mineral Aggregate Type 6 or 7
- Flexible pipe: Class B with Mineral Aggregate Type 22

SPU generally prefers Class B bedding because it provides both bedding and initial backfill in the pipe zone, reducing the potential for damage from backfill compaction. A minimum of 1 ft over the top of a clay pipe is required compared with a 6-inch minimum for other pipe materials. If using a larger cushion of rock over the top of a pipe, prepare a design drawing detail showing any section differing from Standard Plan 285.

When using a sand bedding material to separate a metallic pipe from controlled-density fill (CDF) or fluidized-thermal backfill (FTB), Standard Plan 285 requires a 1-ft envelope of sand encapsulating the pipe. This provides greater separation from potential corrosion created at the interface of the soil and cementitious material.

For non-standard soil conditions, consult with the geotechnical engineer. See section 3.15 of *DSG Chapter 3, Design for Construction* for details on geotechnical services.

Tip: *Standard Plan 285 refers to pipe bedding that aligns with the City Standard Specifications and how construction contracts are measured and paid. This convention for payments includes elements of pipe foundation, pipe bedding and pipe zone backfill. The design engineer should be careful to differentiate the bid item terminology from any pipeline loading analysis, which will most likely separate these components.*

8.7.4.10 Connections and Tie-In Requirements

For new connections to existing DWW pipes, refer to **Appendix 8E - Core Tap Procedures for Storm and Sewer Mains**. If the lateral is a private service, connection pipe and bedding should be placed per the Standard Specifications and the Side Sewer Director's Rule. SPU does not require profiles on the drawings for lateral connections unless there are conflicts or constraints with other utilities that need to be communicated with the Contractor. Profiles are required for non-standard connections. Conflicts that could prevent connections must be identified.

For new pipe installation, identify the location and size of each new tee fitting on the drawings. The tees are separate bid items. Check for conflicts with other utilities that could prevent use of the standard angle of connection since all non-standard laying conditions must be noted on the drawing. Pre-fabricated tees for side sewers must be used for new mainline pipes less than 24 inches in diameter. Bell-less tees are recommended with clay pipe, to allow side sewers to be connected with shielded flexible couplings.

When any part of a private lateral service is replaced, it must be installed with a minimum slope of 2% to the point that it reconnects to the existing private service. These pipes are owned by the adjacent property and deviations such as grades less than 2% are recorded with King County on the property title.

For all connection pipes, follow Standard Plan 286 requirements for separation from the drinking water system. For pipe materials for lateral pipes owned by SPU, refer to DSG section 8.7.4.8.

For privately owned lateral side sewers and service drains, SPU's standard is to replace pipe and bedding using pipe and bedding in an equal or better condition. SPU does not generally coordinate with each side sewer or service drain owner for work on their pipe. The engineer must represent the interests of the owner in redesign of the system and follow the City's code and rules for side sewers.

8.7.5 Maintenance Holes

MHs provide access to safely inspect and maintain storm drains and sewers. MHs are also used for pipe junctions, changes in pipe size and changes in horizontal or vertical alignment. SPU does not use MHs for lateral service or CB connections.

8.7.5.1 Location and Spacing

Locate MHs near intersections in standard locations, per Standard Plan 030 whenever possible, to allow for future extensions into side streets. Stubs to the side streets must be included to facilitate CB connections. The slope and depth of the stubs must allow for future extension into side streets. If a pipe is more than 100 ft long, MHs must be placed at the upstream end of the pipe run. Consult with Operations about any pipe end that is not an MH.

MHs should be located to minimize traffic impacts during maintenance. Crews do not want to block driveway access while performing their work. Ideally, only one lane closure is required. MH covers should be located outside of the wheel path in the travel lane to minimize wear of the casting and noise when there are irregularities in how the cover sits in the frame. Unfortunately, paint lines can be reconfigured over time.

Do not locate new MHs in the landing of ADA curb ramps or marked or unmarked crossings. Do not locate MH covers within a curb. For existing MHs, apparent curb/cover conflicts must be brought forward and addressed during design. Depending on the structure type, reconfiguring the top portion may solve the conflict. This would also require ladder replacement. SPU does not accept utility covers.

When a small-diameter pipe intersects a large-diameter pipe, it may be appropriate to set the MH on the small-diameter pipe 10 to 30 ft away from the junction with a tee connection to the large-diameter pipe. The smaller pipe nominal diameter should be less than half that of the larger pipe. This approach reduces flow disruption and the risks and expense associated with constructing an MH on the large pipe. When the large pipe is brick or partially a brick mainline, the design should avoid setting a new structure, as that is a currently not possible.

Standard spacing between MHs is 375 ft. MHs must be located using stations and offsets or dimensions from street centerlines or established City monument lines. MH numbering and asset identification should be assigned between 60 and 90 percent design and shown on the design drawings to allow for record tracking and acceptance during construction. Provide 60% drawings to SPU GIS for coordination with MAXIMO to obtain MH numbering assignments.

Tips: *Standard use of an MH requires truck access to the cover. There are places in the City where this cannot be achieved, especially on steeper hillsides. Alternative access or layouts should be*

discussed with Operations. Closer to a wall and closer to a roadway is better, for instance when truck access cannot be provided.

Spacing greater than 375 ft should be considered when it allows for better access to the MH. SPU engineers can determine what is appropriate for spacing up to 400 ft between structures. Spacing greater than 400 ft requires coordination with Operations.

SPU has not developed separate spacing rules for very large diameter pipe, as many jurisdictions have. Very large diameter pipe is usually cleaned differently than our smaller collection pipes. Occasionally, SPU contracts out for cleaning of very large diameter pipe. This can change the spacing requirements and should be coordinated with Operations. Each additional MH structure on a large diameter pipe is a major expense.

8.7.5.2 Maintenance Hole Material

Reinforced concrete is the standard material used for MHs. SPU structures were constructed of brick until the 1950s.

See MH Standard Plans 204a through 212b for 4 ft to 12 ft diameter structures. These standards provide different base reinforcement—both precast and cast in place—requirements for up to 20 ft deep, between 20 and 30 ft deep, and between 30 and 40 ft deep. See **Appendix 8A - Structural Calculations for Maintenance Holes** for the calculation summary. MHs deeper than 40 ft must be designed by a Professional Engineer, registered in Washington State. All MHs must be designed for a minimum traffic loading defined by American Association of State Highway and Transportation Officials (AASHTO) HS-25.

If more than one access hole is required, the top slab reinforcement will need to be designed to accommodate the additional opening.

Tip: *Contractors prefer precast bases. Cast-in-place bases are typically used on existing mains when bypassing flows is difficult or not feasible or when construction space is tight. Note that when using cast-in-place base, the Contractor must submit a lay plan for the reinforcing of the base slab.*

8.7.5.3 Maintenance Hole Sizing

To size an MH, the engineer must know the size and slope of all pipe connections to the MH. The City Standard Plans provide the minimum and maximum hole size relative to the outside diameter of the pipe. See Figure 8-2 for an estimated hole sizing chart (note that Hanson Pipe & Precast [Hanson] is no longer in business). Change in flow direction must not be less than 90°. See Figure 8-3 for MH sizing methodology and selection.

Tips: *For MH structures where hole size is critical in the selection, coordinate with the manufacturer's engineer at a precast company. They will need the pipe outside diameter and slope of the pipe. Steep pipe slopes necessitate larger holes because the pipe cross section at the inside wall becomes oval.*

Sizing using the MH standard with all connecting pipes projected to the center of the structure will result in the largest structure. Large MHs can be difficult to fit in urban streets. Designers may consider offsetting the center of the structure slightly (start with 1 ft offsets for analysis) in one or two directions. Review this non-standard alternative with Operations.

Figure 8-2
Hanson Hole Size Chart

Hanson Pipe & Products - Hole Size Chart

Pipe I.D. (In)	Concrete O.D. (In)	Pipe Hole (In)	PVC Hole (In)	D.I. Hole (In)	HDPE Hole (In)	CMP Hole (In)	ADS Hole (In)	PVC Rib Hole (In)
6	8	12	12	12	12	12	12	12
8	10.5	12	12	12	12	12	12	12
10	12.5	16	16	16	16	16	16	16
12	17	20	16	16	16	16	16	16
15	20	24	20	20	20	20	20	20
18	23	28	24	24	24	24	24	24
21	28	32	24	24	24	24		
24	30	36	28	28	28	28	32	32
27	34	38				32		
30	37	42	34	36	36	36	42	42
36	44	48	42	48	42	42	48	48
42	51	56		52	48	52	60	60
48	58	64	60	60	60	60	64	64
54	65	72		72	72	64	72	72
60	72	78	78	78	78	78	78	78
72	86	92	92	92	92	92	92	92

What is the largest hole that a manhole can have?

36" Hole in a 48" Manhole	60" Hole in a 72" Manhole
42" Hole in a 54" Manhole	72" Hole in a 84" Manhole
48" Hole in a 60" Manhole	84" Hole in a 96" Manhole

Per WSDOT STD. Plan B-23C, the largest hole must be 12" smaller than the manhole inside diameter.

What are the largest holes at 90° that will fit?

2 ea. 28" holes in a 48" manhole	2 ea. 36" holes in a 60" manhole
2 ea. 32" holes in a 54" manhole	2 ea. 42" holes in a 72" manhole

TITLE	PAGE	DATE	
Hole Size Chart	5	11-01-04	Hanson

Acronyms and Abbreviations

ADS: Advanced Drainage Systems
CMP: corrugated metal pipe
D.I: ductile iron
I.D: inside diameter
HDPE: high-density polyethylene
O.D: outside diameter
PVC: polyvinyl chloride

Figure 8-3
Maintenance Hole Sizing Methodology

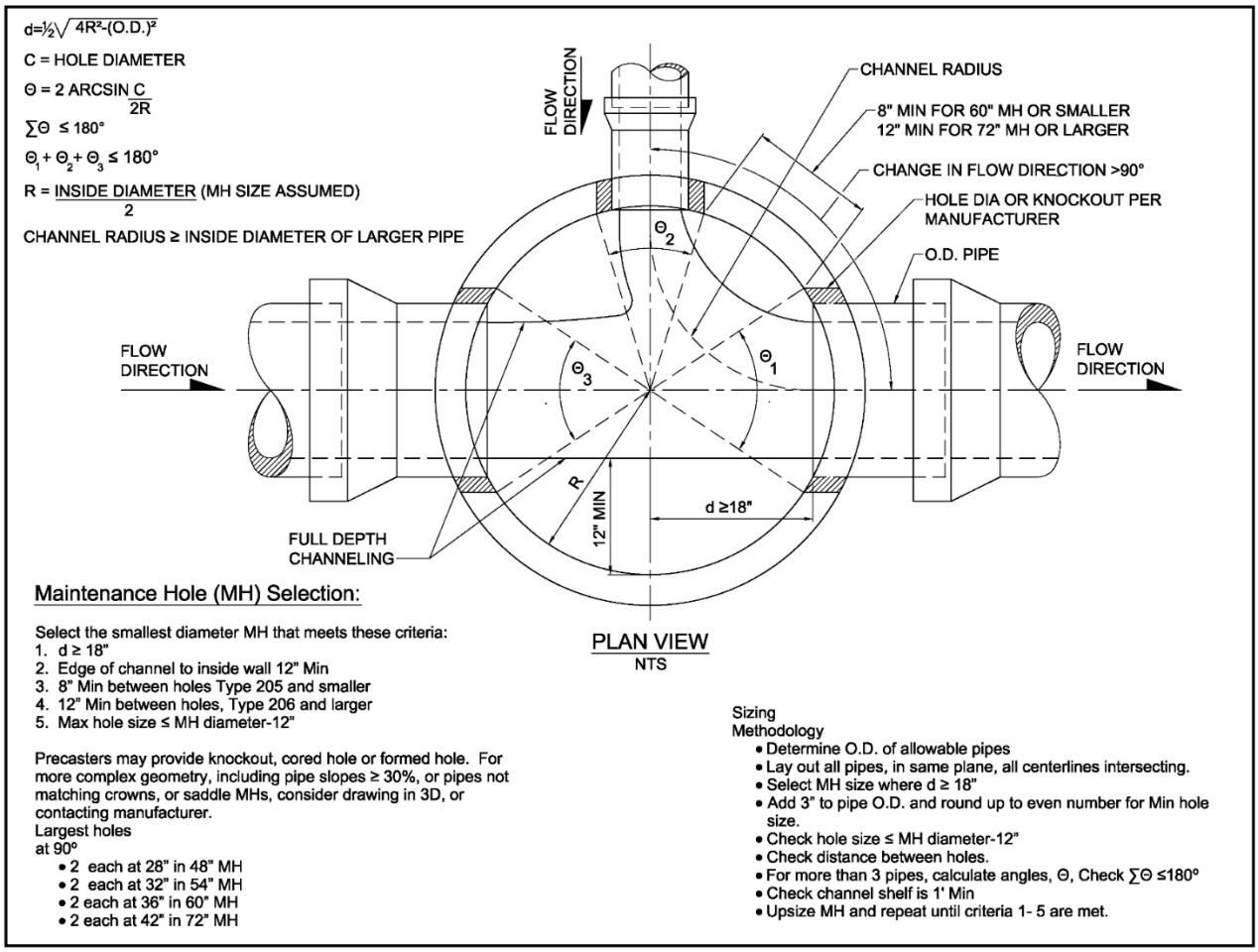

8.7.5.4 Connections to Existing Maintenance Holes

SPU allows public connections to existing MHs if the connections do not compromise the structural integrity of the MH. SPU does not allow private connections to existing MHs. If the structural integrity of the MH is compromised, replace the existing MH with a new properly sized MH. ASTM International requirements regarding hole size and spacing between holes include considerations for MH handling up to the point it is installed in the ground. MHs that are already installed and will have full depth channels after a new connection may not be compromised when a hole is cored closer to an existing hole.

New connections to an existing MH may require that steps, handholds, and ladders be removed and replaced to provide access to stand on the shelf above the channel and to avoid conflict with the flow and entry to the MH.

<u>The following are SPU standards for MH connections:</u>

- MHs must be rechanneled.
- New pipe must match crowns with existing pipe connections.
- Pipe ends must be trimmed flush with the inside walls of the MH.

- The first pipe joint outside of the MH must be placed within 1 ft or one-half the diameter of the pipe, whichever is greater. For clay pipe, two joints are required (see Standard Plan 215).
- Openings must be sealed with grout and be watertight.

8.7.5.5 Junction Flow and Channeling

Standard MHs must have full depth channels. The use of a sump in a storm drain MH will require a design drawing detail and must be approved by Operations. Sumps can be useful for sediment collection, energy dissipation, and, occasionally, when the direction of flow conflicts require dissipation.

8.7.5.6 Frames and Covers

New MH frames and covers must follow Standard Plan 230. When the flange of the frame is embedded in concrete pavement, SDOT has expressed concern regarding pavement cracking and spalling. When required by SDOT, the new concrete pavement should be reinforced according to Standard Plan 406.

Existing brick MHs may have access openings as small as 18 inches, which is substandard. When the project is replacing the pavement, follow Standard Plan 220 (Rebuild Existing Brick MH) to provide for the 24-inch standard access.

Rebuilding brick MHs to improve the access point sometimes uses new reinforced concrete sections. In those cases, the design must consider vertical loading and both pinning the concrete to the brick and supporting any offset load. Additionally, prevent lateral movement between the two differing sections and provide a watertight seal at the joining of the two dissimilar MH sections. Steps and ladders will need to be reinstalled between the rim and channel.

Rebuilding a concrete MH does not currently have a standard plan or standard specification and each project needs to consider each MH and how to adjust the structure for new surface conditions. Adjustments within the brick or collar adjustment section are relatively simple. When the rim elevation change is greater than 6 inches, internal measurements of the structure are recommended to determine how the adjustment will be made. The adjustment method will depend on whether there is a cone section and its height, the depth of an existing top slab, and the location of joints between the MH barrel sections. Adjustments have been made within straight barrel sections by sawcutting a new flat surface. Any adjustments that cut an existing structure need to include provisions for leveling, pinning, supporting differing wall thickness, preventing lateral displacement, and preventing water intrusion. The design drawings should include a design drawing detail. Steps and ladders will need to be reinstalled between rim and channel.

MHs located outside of the roadway require locking covers. For 24-inch-diameter covers, specify type 230L. This must be called out on the design drawings. Where the top of an MH may be covered with floodwater or the system is pressurized, a watertight frame and cover may be specified. These covers feature a rubber gasket and are bolted into place with pent-head (five-sided) bolts. Watertight covers require approval from Operations and require consideration of all other options.

A lid within a lid (24 inches inside a 48-inch diameter) may be used if an MH requires a larger access to replace equipment within the MH. The 24-inch diameter hole allows for inspection. When required, the larger lid can be removed using a truck-mounted hoist for equipment

access. The SPU design engineer, along with their supervisor and Operations, must approve this option.

8.7.5.7 Ladders and Access

Ladders and access must follow Standard Plan 232a and be located according to the MH standard plans. These standards were determined in coordination with Maintenance. These standards allow for visual inspection of all pipes from the surface and deployment of equipment without entering the structure. With larger structures, if there are multiple pipes connected, this may not always be feasible. Vertical handholds are used to provide access to channel shelves in 7-ft diameter and smaller structures, and additional vertical handholds can be called out on the design drawings if deemed appropriate. Discuss with Operations. The current standard for MHs deeper than 20 ft is a harness system with no platforms. Workers are harnessed and must be retrieved without obstruction during an emergency.

For additional information on ladders and access, see Standard Specifications section 7-05.3(1)Q.

8.7.5.8 Drop Connections

Pipes entering the MHs should match crowns for maximum slopes, hydraulics, ease of maintenance and inspection. Drop connections should only be used as a last resort. The different types of available drop connections are detailed below.

A. Inside Drop Connection

If a drop connection cannot be avoided, SPU prefers the inside drop connection, which allows for visual inspection of the drop pipe and any required repair from inside the structure. Standard Plan 233B shows an inside drop connection. The drop connection pipe diameter and fitting must be equal to the diameter of the drainage or sewer line it serves.

B. Outside Drop Connection

If it is not possible to match crowns when connecting to an existing MH and the diameter of the MH does not allow for the installation of an inside drop SPU uses Standard Plan 233A for an outside drop connection. The outside drop can corrode and degrade and is extremely difficult to observe. Replacement has risks to the entire MH and is a less desirable drop connection.

C. Open Drop Connection

An open drop connection may be an option for drainage MHs but is not allowed for sanitary or combined sewer connections. In a sewer, an open drop can put access to the shelf within the sewer flow and the turbulence and release of corrosive sewer gas is not acceptable. If allowed, the open drop should not exceed 4 ft. Use of an open drop should be reviewed and approved by Operations. Figure 8-4 shows an open drop connection for drainage MHs.

Figure 8-4
Open Drop Connection for Maintenance Holes

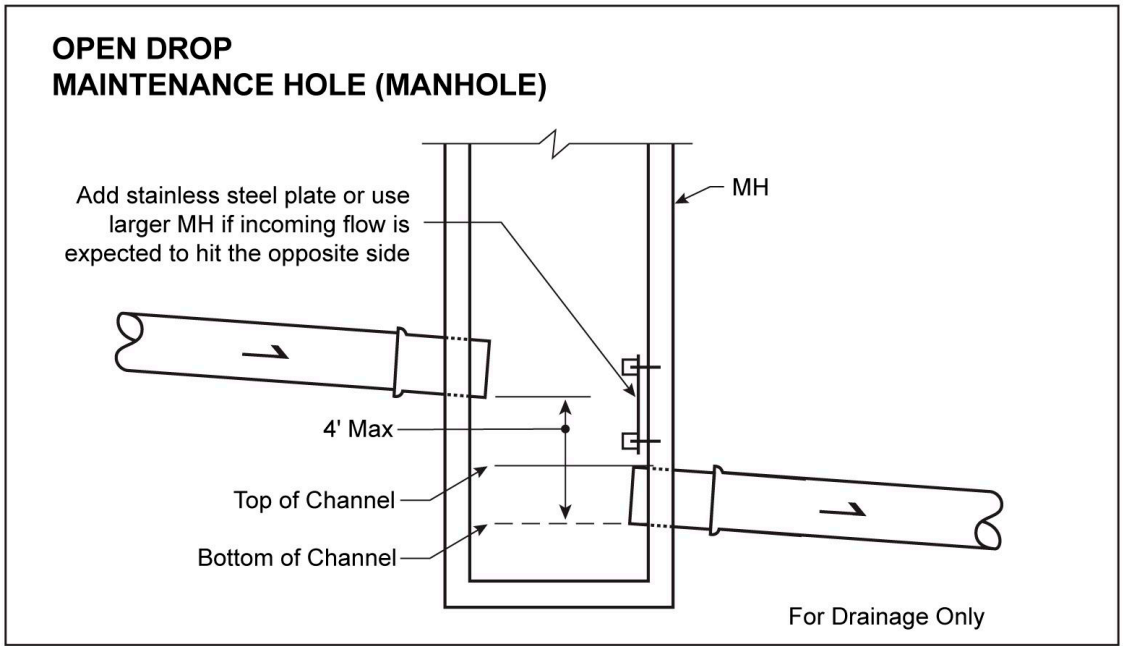

8.7.6 Ditches and Culverts

The primary purpose of a ditch and culvert system, an informal drainage system, is to convey surface water runoff water away from roadways or adjacent land. They are considered capacity constrained. Most ditches in the existing informal drainage system were designed or built as part of the roadway without engineering before pipe drainage standards were in place.

Ditches should not be confused with biofiltration swales or bioretention cells. In addition to collecting and conveying drainage, swales treat runoff by filtering out sediment. If properly maintained, vegetated ditches may have some water quality benefit. Newer installations, of what would be considered a ditch, are called vegetated conveyance swales, as shown on Standard Plan 294.

For design information for ditches, see WSDOT's *Hydraulics Manual* or FHWA HEC 15.

Culverts are relatively shallow pipe generally used to convey stormwater collected in ditches or vegetated swales under or adjacent to roadways, driveways, or railroads. In some areas of the City, culverts may extend several blocks, with surface water collected through inline sandboxes or JBs, many of which may have been ditches that were filled over time.

In addition to serving hydraulic functions, culverts also carry construction, highway, railroad, or other traffic and earth loads. Therefore, culvert design includes both hydraulic and structural considerations. Culverts often significantly influence upstream and downstream flood risks, floodplain management, and public safety.

Culverts range from small circular pipes to extremely large arches or boxes. Sometimes, through coordination with SDOT, the culvert may be designed as a bridge (see DSG section 8.7.7). For SPU culverts, the minimum size is 12 inches. The most commonly used culvert shape is circular.

Tip: *Some ditches are considered "waters of the state" and will require State of Washington permits For consultation and/or major maintenance, see DSG Chapter 2, Design for Permitting and Environmental Review.*

Observations in the field, and conversations with Operations Crews, may lead you to believe that an existing facility is a ditch. Check the ditch and culvert layer in GIS, if it does not show up it will likely be included in the urban watercourse layer.

8.7.6.1 Design Considerations for Maintenance

Design for vegetated conveyance swales must allow for a condition inspection of the following:

- Amount of sediment that has accumulated
- Vegetation growth, if any
- Occurrence of erosion, down cutting, and overtopping

A condition assessment should be completed regularly and as needed following significant storms. Conveyance swale maintenance access must be available along at least one side of a swale. During design and follow-up maintenance, ensure that large trees cannot block access. Grass and low-growing shrubs are recommended plantings for the channel side used for maintenance access. For bioretention cells, see **Appendix 8C - GSI Manual**.

8.7.6.2 Culvert Materials

CMP or arches are not approved for new SPU assets because of corrosion and water quality concerns. Ductile iron is generally preferred for shallow culvert pipe installations due to pipe loading issues. Concrete pipe, both reinforced and unreinforced, has been used widely in the informal system in the past. Unreinforced concrete is not appropriate for anticipated roadway loads.

Reinforced concrete may be designed for the loading but should only be used when issues of abrasion, pipe bottom erosion, and low-pressure air testing have been addressed. Bends in concrete pipe should be avoided.

A variety of flexible pipe materials with smooth interiors have been used with variable to negative results, both for new connections and maintaining pipe roundness. When considering use of any flexible pipe for culverts, discuss with Operations and the Pipe Assessment group. Any proposal to use flexible pipe is subject to deflection testing 30 days after backfill and prior to paving. Thus, construction schedule impacts must be addressed. This often means that flexible pipe is not feasible due to construction schedule constraints.

8.7.6.3 Hydraulic Evaluation of Culverts

Culvert capacity can be extremely complex. However, simple procedures have been developed to classify and analyze flow conditions based on control sections. A control section is a location where there is a unique relationship between the flow rate and upstream water surface elevation. Many flow conditions occur over time, but at any given time flow is either governed by the culvert's inlet geometry (inlet control) or by a combination of inlet geometry, barrel characteristics, and tail water elevation (outlet control). For typical conditions of inlet and outlet control and procedures for the analysis of the conditions, see WSDOT's *Hydraulics Manual* and King County's Surface Design Manual.

In some cases, the ditch and culvert system provides detention as well as conveyance in the basin. Any revisions to the system should include this in the analysis of upstream and downstream effects.

8.7.6.4 Headwater

The design flow should remain in the ditch. Depending on the location, high flows may be allowed to overtop the roadway. When that is allowed, it should not cause erosion or flooding onto private property.

8.7.6.5 Velocity

Both minimum and maximum velocities must be considered. Maximum velocities are limited to prevent excessive erosion (Table 8-4).

Table 8-4
Erosion Protection for Culvert Design

Velocity	Condition
Maximum:	Level of outlet protection required at maximum velocity
<5 fps	Minimal erosion protection required (quarry spalls, 4 inches to 8 inches, Standard Specifications section 9-13.7) No special consideration
5–10 fps	Substantial erosion protection required at outlet. Consider pipe flow and fish passage problems
>10 fps (not recommended)	Energy dissipater, shaped riprap basin, or other measures requiring a special design required at outlet. Consider abrasion of pipe when selecting pipe material and scour of bed material in bottomless culverts

Acronyms and Abbreviations

fps: feet per second

8.7.6.6 Size

See City CAM 1180 (**Appendix 8D - CAM 1180**) for details regarding sizing for ditches and culverts.

8.7.6.7 Alignments and Junctions

Wherever practical, culverts should be placed on a straight alignment and grade and should have straight entrance and exit channels.

If junctions in a culvert alignment or grade are required, JBs per Standard Plan 277, either a cover or grate may be used. This standard may also be modified to include a sump, if desired, to allow for sediment collection and cleaning. If a sump is included, label the structure as “modified” with a note stating, “do not fill sump.” The Type 277 JB will show up in the Maximo system as an access point that does not require maintenance, unless specified otherwise.

8.7.6.8 Inlet/Outlet

Culvert design should consider headwalls, wingwalls, aprons, or flared end sections at the inlet and outlet.

Additional protection in the form of riprap may be required at the inlet and outlet due to the potential for scouring velocities (Table 8-5). Riprap is often discouraged by environmental agencies and may require additional mitigation during the permitting negotiation process. Bioengineering for bank stabilization is preferred (e.g., soil wrap, planting, large woody materials).

Table 8-5
Inlet/Outlet Protection Required Conditions at Given Velocities

Maximum Velocity at Outlet (fps)	Protection Required
<5	Quarry spalls, 4 to 8 inches (Standard Specifications section 9-13.7)
5–10	Light loose riprap (Standard Specifications section 9-13.2(2) and larger
10–15	Heavy loose riprap (Standard Specifications section 9-13.2(1) and larger
>15 (not recommended)	Energy dissipater, shaped riprap basin, or other measures requiring a special design

Acronyms and Abbreviations
fps: feet per second

8.7.6.9 Trash Racks

Trash racks may be required upstream of culverts on a case-by-case basis to reduce blockages and facilitate cleaning and debris removal. A trash rack typically increases the frequency of maintenance but can reduce the effort necessary to clear a blockage when compared with clogging in a culvert.

Trash racks are generally sloped so that debris will become trapped on the angled rack, allowing flow to continue through the channel. Trash racks are usually sloped up at 3:1 to 5:1 to allow trash and debris to slide up the rack with rising water levels. The slower the approach velocity, the flatter the trash rack slope must be.

Special consideration must be made for maintenance requirements and to provide additional allowable head at the entrance if there is potential for blockage.

For typical trash racks (debris barriers), see King County's Surface Water Design Manual. For areas of heavy debris loading, see FHWA HEC-9 for special design requirements.

8.7.6.10 Design Considerations for Maintenance

Design for culverts should consider system inspection of:

- Ends of culvert for undercutting (water eroding the foundation of the structure)
- Silt and debris accumulation, which can block the culvert and reduce capacity
- Erosion around structure, specifically near base and close to the road, if applicable
- Cracks in structure, specifically at entrance and exit of culvert

Consider access for maintenance during design and layout of a culvert. Adequate access is required to clean out entrances (especially with trash racks or debris catchers) and to maintain outlets. Culverts under high fills may require an access road or stairs to the inlet and outlet.

8.7.7 Culverts in Streams and Intermittent Streams

The City has many existing streams or intermittent streams. Replacement of culverts that allow crossings of roadways, driveways or railroads have special requirements that will depend on the stream type. The DWW LOB representative will likely know the stream type and may need to confirm with the Washington Department of Fish and Wildlife (WDFW).

Permits and design review are required for all work in streams, but culverts or other water crossings on fish bearing (Type F) waters must meet current state and federal fish passage regulations (see WDFW's 2013 Water Crossing Design Guidelines).

WDFW's 2013 Water Crossing Design Guidelines define three design options for stream culverts (hydraulic design, no-slope design, and a stream-simulation design). The no-slope design is not typically feasible in the City. Permitting agencies generally expect use of stream-simulation design methods unless inappropriate or infeasible for the site. In stream-simulation design, the minimum width of the bed in any type of culvert ($W_{culvert}$ bed, in ft) is determined using the following equation:

$$W_{culvert}bed = 1.2W_{ch} + 2\ (in\ ft)$$

Where:
W_{ch} = Width of the bankfull channel
$W_{culvert}$bed = Width of the bed inside the culvert, not the culvert diameter or width

The calculated result is then rounded up to the next whole ft. This leads to some significant upsizing of culverts. Any culvert greater than 20 ft in diameter or width must be registered with the National Bridge Inventory and thus designated a bridge owned by SDOT. Therefore, SPU must coordinate with SDOT when designing culverts for streams or intermittent streams that could result in a new bridge.

For stream culverts, SPU prefers reinforced concrete structures designed for an HS-25 roadway loading. Fish passage requirements usually dictate the size of a culvert, typically requiring a much larger culvert than if the size were based on capacity calculations. However, enlarging a culvert may increase downstream flood risk and sediment transport and alter the upstream ecology (lowering of the ordinary high water mark) and morphology. The replacement of a culvert might require improvements beyond the existing culvert location and involve upstream or downstream channel work and/or additional modification to the system. Modeling tools such as the Hydrologic Engineering Center's River Analysis System (HEC-RAS) modeling, developed by the Corps, can be helpful in analyzing culvert issues.

Generally, in the SPU system, pipe arch and rectangular shapes are used in lieu of circular pipes for designing stream culverts. Circular pipes have limited room for cover over the pipe. Arch culverts have application in locations where less obstruction to a waterway is a desirable feature. Where culverts are installed in fish-bearing streams, the use of a bottomless culvert may be required. Culverts frequently require a structural headwall.

The alignment and grade should be as close as possible to the natural streambed or channel. When conditions make the ideal alignment and grade impractical, the design engineer should consider relocating a portion of the channel or using small angle bends in the culvert. Fish

passage requirements may dictate velocity requirements. Consult with WDFW and the Corps during design.

For additional information regarding the design of stream culverts, refer to *DSG Chapter 2, Design for Permitting and Environmental Review*, *DSG Chapter 3, Design for Construction*, and *DSG Chapter 4, General Design Considerations*.

Tips: *Work in and around streams, including culvert replacement, require landscape restoration. Landscaping/wetland/riparian mitigation are an integral and important part of the design and permitting process.*

Schedule survey during fall or winter when vegetation is less dense.

8.7.8 Water Quality Treatment

Water quality treatment BMPs remove pollutants in stormwater runoff, including sand, silt, other suspended solids, metals attached to those solids, nutrients, bacteria and viruses, and organic contaminants. Methods of pollutant removal are sedimentation (or settling), filtration, plant uptake, ion exchange, adsorption, and bacterial decomposition. Structures with baffles can be used to remove floatable pollutants such as oil, debris, and scum.

For detailed guidelines for water quality treatment facilities, see Volume 3 of the Stormwater Manual.

8.7.8.1 Treatment Facility Options

To determine whether water quality treatment is required for a project, refer to Volume 1 of the Stormwater Manual or *DSG Chapter 18, Development Services* for stormwater flow charts for projects in the ROW. Stormwater treatment can also be a retrofit of the drainage system not required by the City Stormwater Code, which allows the project to determine the performance goals.

The Stormwater Manual includes requirements for selecting BMPs that must be analyzed in a specified order for any project required to install water quality treatment according to the Stormwater Code. When there is a choice, SPU prefers technology in the following order:

- Bioretention (infiltrating or non-infiltrating)
- Infiltration
- Non-infiltrating BMPs using filtration technology
- Settling
- Traditional infrastructures (e.g., ponds, sand filters, vaults)
- Proprietary water quality treatments
- Treatment train when oil control is required, SPU prefers API vault treatment rather than coalescing plates

Consult with Operations when choosing the appropriate BMP.

8.7.9 Flow Control

The Stormwater Code and associated Stormwater Manual regulate activities that impact the quality and quantity of stormwater runoff.

Note: *This chapter of the DSG frequently directs the user to the Stormwater Manual, which is SPU's source for detailed design information on flow control BMPs. For flow control using detention pipe also see Standard Plan 270, CAM 1180, and DSG section 8.7.3.8.*

When evaluating options for flow control, whether required by the Stormwater Code or not, evaluate the potential for using GSI to achieve the project goals. Do not rely solely on the infiltration investigation layer mapped in GIS. See **Appendix 8C - GSI Manual**.

Flow control options should be evaluated when considering methods to increase capacity in a drainage system or a combined sewer system.

8.7.9.1 Flow Control Facility Options

SPU prefers, in order of importance, the following BMP categories for managing stormwater flow, peak, duration, and volume:

- Impervious surface reduction (reducing the total impervious surface on-site)
- GSI
- Detention pipe conforming to Standard Plan 270; detention pipes are preferred over vaults or tanks for maintenance purposes
- Other detention BMPs described in the Stormwater Manual
- Detention facilities (detention pipes, ponds, vaults, or tanks)

8.7.9.2 Detention

Typically, SPU detention is designed as offline facilities, since inline facilities provide less flow control when designed as a flow-through facility. An option for larger detention facilities providing flow control for the entire upstream drainage basin can be evaluated for projects proposing system retrofits. See Chapter 3 of the Stormwater Manual for other requirements for flow through detention design.

When detention pipe is not feasible, detention vaults, box-shaped underground storage facilities typically constructed with reinforced concrete, should be considered for use as a detention facility. Vaults are more difficult to maintain than detention pipe. However, vaults may be a practical choice when combining detention with stormwater treatment in a combined detention vault/wet vault. Detention vaults may be designed as cast in place structures, or precast structures. In both cases, design must include:

- Vactor truck access
- HS-25 loading
- Constraints on detention vaults and wet vaults, such as minimum depth and lengths described in Chapter 5 of Volume 3 of the Stormwater Manual, that relate to both effectiveness and maintenance needs

8.7.9.3 Flow Control Structures

Flow control structures control the rate at which water is released from or through a facility. SPU typically uses MHs with a restrictor device (flow control device) for controlling outflow from a facility to meet the desired performance. These structures can include shear gates, drilled hole orifices (> 0.5 inches), and weirs. See Standard Plan 272A and Appendix E of the Stormwater Manual for the most commonly used flow control devices. SPU Operations must approve other methods of flow control. The following are SPU standards for flow control structures:

- Access must be provided to the flow control structure from the ground surface with a circular ring and solid cover or access hatch.
- The ring and cover must be set so the flow control device or the ladder is visible at the edge of the access opening.
- The top of the overflow pipe must be at least 6 inches below the bottom of the MH top slab. The top of the pipe must be no lower than the crown of the upstream end of the detention pipe.
- Minimum orifice size must be 0.5 inches without screening.
- Minimum distance between the lowest orifice and the floor of the structure must be 2 ft.

8.7.9.4 Maintenance Access Requirements

City Vactor trucks use vacuum rather than positive displacement to clean stormwater vaults. A Vactor truck's maximum effective suction depth is about 25 ft. Allowing for 5 ft from the Vactor truck to the rim of the structure, the maximum cleanable vault is about 20 ft deep.

SPU prefers to limit the maximum vault depth to 17 ft, which allows more flexibility during regular maintenance activities. For additional details regarding maintenance design considerations, refer to *DSG Chapter 4, General Design Considerations*.

8.7.10 Green Stormwater Infrastructure

GSI includes stormwater BMPs designed to reduce runoff and pollutants from development using infiltration, evapotranspiration, or stormwater reuse. Because GSI includes emerging stormwater management techniques, refer to SPU's GSI website for updates and supplemental information. See **Appendix 8C - GSI Manual** for guidance on SPU bioretention projects. See the Stormwater Manual for "on-site" requirements, which has replaced the term GSI in the City Stormwater Code.

8.7.11 Outfalls

An outfall is a discharge point into a body of water. SPU outfalls discharge into Puget Sound, lakes, rivers, or streams.

For design guidance on outfalls, see King County's Surface Water Design Manual. New public outfalls to a water body are rare in the SPU system. Permitting and permit conditions from a multitude of agencies are a major part of outfall design. Obtaining permits and identifying permit conditions must be done early, because they will impact feasibility and costs. See *DSG Chapter 2, Design for Permitting and Environmental Review*.

SPU has many types of outfalls within its drainage and wastewater system. Permitting, regulations, engineering, and maintenance for outfalls are based on site specifics.

Outlet velocities greater than 10 fps will require energy dissipation. FHWA, the Corps, Bureau of Reclamation, and U.S. Department of Agriculture (USDA) (Natural Resources Conservation Service) all provide procedures for the design of high-velocity energy dissipaters.

Outfall design must accommodate the need for crews to maintain the outfall and visually inspect the main. Submerged outfalls are repaired by specialty contractors with the equipment and ability to work in water.

8.7.11.1 Backwater Valves

Backwater valves, or flap gates, may be required to prevent backflow from high water in rivers, streams, and tidally influenced water bodies. Metallic flap gates have been used in the past but require regular maintenance to remain operable. SPU gates exposed to saltwater have routinely failed, with a gate frozen in place. This has been especially problematic when it resulted in saltwater intrusion into the combined sewer system at CSO outfalls. Any new backwater valve should be elastomeric. The design calculations must:

- Consider the losses through the valve/flap gate
- Consider the difference in density between fresh and saltwater
- Consider the extremes in the pressure difference to ensure that the product will perform as required
- Consider a variety of pressure differentials, including those caused by sea level rise

Consult with Operations when designing for the installation of a backwater valve or flap gate. It may be preferable to install the valve in a vault as opposed to the end of pipe to accommodate maintenance, inspection, and future replacement.

The design life of elastomeric backwater valves and flap gates is much lower than the other features of an outfall design, like pipe and concrete structures. Consider this and consult with manufacturer's engineers when doing life cycle cost analyses or summary of required O&M activities.

8.7.11.2 Fish Barriers

For a new or rehabilitated outfall below the water level, the WDFW requires a fish barrier to prevent fish from entering pipes. SPU prefers not to have fish barriers because they can clog, impacting the upstream drainage system.

Inspection is challenging when the barrier is submerged and maintenance issues may not be identified until the upstream system becomes backed up. If fish barriers are required, SPU prefers fish barriers that function like an elastomeric flap gate that will allow debris to be pushed through rather than build up. Design the outfall to require the least amount of maintenance as possible.

8.8 SANITARY SEWER DESIGN

For common design elements between sanitary sewers combined sewers, and storm drains, this section cross-references DSG section 8.7.

This section describes design of gravity sanitary sewers. Do not rely exclusively on GIS mapping of the sanitary sewer system to determine which sewers are sanitary only. Rules differ radically between sewers originally built as a combined sewer and sewers built only to carry sanitary sewage. In GIS, both types are currently mapped as "SPU Sanitary Main in the layer DWW Mainlines (permitted use)." For design related to sewers built as combined, as well as currently permitted for new connections, see DSG section 8.9.

8.8.1 General

Sewer mains are publicly maintained systems that convey sewage (wastewater) to a treatment facility. Wastewater is water released by internal sources (e.g., toilets, bathtubs, or businesses) and other everyday sources of contaminated water. Residence and building structure plumbing outlets are connected to the sanitary or combined sewer system. For structures, such as transportation tunnels where incidental drainage structures are interior and may be subject to soaps or chemical discharges, connections to the sewer system instead of the separate drainage system are required. For list of allowable and prohibited discharges to the drainage system, refer to the Stormwater Code. For a list of prohibited discharges to the sewer system, refer to the Side Sewer Code. Within a building and a perimeter up to 18 inches surrounding the building, sewage is regulated by the plumbing code.

In most of the City, sewers have been designed and constructed to only convey sanitary sewage discharge into older parts of the system that were built to convey combined sewage. King County operates and maintains treatment plants and major pipelines carrying sewage from more than 1,000 acres. Except at a few outlying locations, treatment of wastewater is provided at the West Point Treatment Plant. Some sewage treatment in southwest Seattle is provided by the Southwest Suburban Sewer District.

Some areas and scattered parcels in the City are not served by a sewer system but instead rely on individual septic systems. The Seattle-King County Department of Health regulates septic systems. Where separate stormwater and sewer systems are available, drainage features, including downspouts, are connected to a separate storm drainage system. Where separate stormwater systems are unavailable, drainage has sometimes been illicitly connected to the sanitary sewer. It can be difficult to distinguish those illicit direct connections from infiltration in older sanitary sewers.

Not all water can be disposed of as wastewater in the City/King County sewer system. Contaminated water containing petroleum products, certain chemicals, or biohazards cannot be effectively treated by sewage treatment facilities and are regulated by King County Industrial Waste. SPU also has regulations and an outreach program to reduce the disposal of fats, oils, and grease (FOG) and rags into the sewer system. FOG and rags can create serious maintenance problems and backups within the collection system.

For additional information on wastewater, refer to the Side Sewer Code and Side Sewer Director's Rule. Review the FOG Program for additional information on managing FOG in the collection system.

8.8.2 Hydraulic Evaluation and Capacity Analysis

SPU's City-wide model of the SPU sanitary sewer and combined sewer system should be the starting point for any hydraulic evaluation. Consult with the Investigations and Modeling section in the DWW LOB.

Design sanitary sewer extensions for the existing zoning or, if proposed, upzoning. Consider the maximum anticipated capacity of institutions, industrial parks, and similar large facilities. See Ecology's Criteria for Sewage Works Design (The Orange Book) for standard flow assumptions and peaking factors. Flow analysis for sanitary sewer expansions should consider flow monitoring (see *DSG Chapter 7, Drainage and Wastewater System Modeling*). New sanitary sewer flows must be analyzed for downstream impacts.

Downstream pipe sizes must be equal or greater in diameter. Do not create a potential pinch point by reducing diameter in steeper terrain. Minor variations due to pipe lining are acceptable.

For sewer bypass capacity calculations, refer to section 3.11 of *DSG Chapter 3, Design for Construction*. The Sewer Rehab design group can provide estimated low and high flows.

8.8.3 Sanitary Sewer Basins

Wastewater System Planning has delineated the sanitary sewer and combined sewer system for analysis, accounting for control points in the system. Use these sewer basin boundaries for any modeling required for sewer design.

8.8.4 Pipe Sewer Sanitary

Pipe sewer sanitary (PSS) refers to mainline sanitary-only sewers in the Standard Plans. PSS design must consider conveyance as one element of the sanitary system. The design must allow for:

- Gravity drainage of the entire defined sewer basin
- Protection of property from sanitary sewer backups
- Service needs for private properties, both existing and allowed development
- Future extensions upstream and downstream of any proposed project
- Access for maintenance, repair, and rehabilitation of the sanitary sewer pipe system
- A design that does not relocate an existing problem to a new location

8.8.4.1 Pipe Size

Sewer pipe must be a minimum of 8 inches in diameter. The sewer system must be sized for the full sanitary sewer basin based on the current or proposed zoning, whichever is greater, assuming all the properties will be developed. Size for peak flows using peaking factors. Size for any existing infiltration and inflow (I/I). For existing pipes consider monitoring flows. For additional information regarding monitoring and modeling the drainage and wastewater system, refer to *DSG Chapter 7, Drainage and Wastewater System Modeling*.

Even if the hydraulic calculations allow, larger pipes should not discharge into smaller pipes because this increases the risk of blockages.

8.8.4.2 Velocity

See DSG section 8.7.4.2 for general details regarding velocity in designing drainage systems. When designing sewers, check for cleansing velocities during peak flows.

There is a difference in design of sanitary sewers from storm drains for excess velocity. Consider reducing velocity that could damage pipe with grade reductions between MHs or inside drops. Energy dissipation that could block sanitary sewage debris is unacceptable. The use of pressure covers to contain hydraulic jumps should be discussed with Operations.

8.8.4.3 Pipe Slope

Minimum pipe slopes for sanitary sewers are provided in the Criteria for Sewage Works Design (The Orange Book). Sewer systems that cannot meet these minimum slopes must be evaluated for pumping.

8.8.4.4 Cover

Standard cover on a sewer is 12 ft. This allows for gravity discharge from a basement.

8.8.4.5 Hydraulic Grade Line

Unlike drainage system designs, the sanitary sewer system should not be designed to surcharge. The exception being where dictated by a downstream boundary condition. Any HGL that surcharges the pipe should be shown on the pipe profile. In addition to showing the HGL on the pipe profile, inform GIS of hydraulic constraints for gravity services to advise reviewers of future sewer service requests.

Tip: *One of the difficult downstream boundary conditions is the rare connection of a gravity sewer to a force main. Pressures can change on force mains, which in turn changes whether the design of the gravity connection is adequate. This can result in sewer backups and gravity pipeline failures. Since both King County and SPU operate sewer pump stations, communications between the two agencies have lapsed at different times. Proceed with extreme caution.*

8.8.4.6 Profile

All drainage and wastewater plans must have a pipe profile showing MH spacing, pipe size, pipe material, and HGL. Measurements must be per Standard Plan 010, which is to the center of MH.

For sanitary sewers, where a smaller sewer joins a larger one, the invert of the larger sewer should be lowered sufficiently to maintain the same energy gradient. A simple approach is to match the crown elevation to both pipes.

8.8.4.7 Alignment

Pipes must be laid with straight alignment between MHs.

8.8.4.8 Pipe Material

SPU prefers clay pipe for most sanitary sewers because properly installed clay pipe is resistant to almost all wastewater components and spilled materials and is not subject to corrosion. Further, clay pipe has superior resistance to abrasion and erosion. See DSG section 8.7.4.8 for a discussion on other pipe material issues to consider.

SPU prefers ductile iron pipe for force mains.

8.8.4.9 Pipe Bedding

Refer to DSG section 8.7.4.9 for a general discussion of pipe bedding that applies to sanitary sewer design.

8.8.4.10 Connections and Tie-In Requirements

Refer to DSG section 8.7.4.10 for a general discussion of connections and tie-in requirements that applies to sanitary sewer design.

When the mainline pipe is more than 20' deep a vertical connection may be used, see Standard Plan 234. There are existing vertical connections in the sewer system identified on the historic side sewer cards as S.C. (standing connection) which may have more than one side sewer connection. When that is the case, the vertical portion is owned and maintained by the City.

Drainage appurtenances must never connect to sanitary-only sewers. This does not apply to sewers designed as combined sewers.

8.8.5 Maintenance Holes

See DSG section 8.7.5 for a general discussion of MHs that applies to sanitary sewer design. Sewer MHs cannot use sumps, as described in DSG section 8.7.5.5, or open drops, as described in DSG section 8.7.5.8.

SPU does not allow bends in sewer mains between MHs.

8.8.5.1 Location and Spacing

See DSG section 8.7.5.1 for a general discussion of location and spacing that applies to sanitary sewer design. The following are SPU standards for locating and spacing sewer pipes that differ from those standards defined in DSG section 8.7.5.1:

- Sanitary sewer lines must be placed on the center line of the ROW (see Standard Plan 030). This allows for equitable costs and liability for future replacement or repair of the side sewers, because this is a high-risk, high-cost utility for homeowners. Any proposed exception will need to consider side sewer costs and equity as part of the analysis.
- MHs must be installed at the upstream end of each line.
- MHs must be installed at all changes in grade, size of pipe, or pipe alignment.

8.9 COMBINED SEWER DESIGN

For common design elements between sanitary sewers, combined sewers, and storm drains, this section cross-references DSG section 8.7.

Public combined sewer facilities carry both stormwater and sewage to a treatment facility owned and operated by King County. Treated water is released to Puget Sound. Originally, a combined drainage and wastewater sewer system was used throughout the central areas of the City. Over time, separate storm drains, detention facilities, and a variety of drainage systems were constructed. In addition, the City grew in size through annexations of areas where most pipes were built for sanitary sewage flows only. Rainfall can result in CSOs into natural water bodies.

For information on the CSO program and new CSO control facilities, consult with SPU project engineers for the Henderson, Genesee, and Ship Canal projects in addition to long-term control plan documents. Provisions for monitoring, reporting, controls require close coordination with King County and regulating agencies.

8.9.1 Hydrologic and Hydraulic Evaluation

For sewer bypass capacity calculations, see section 3.11 of *DSG Chapter 3, Design for Construction*.

8.9.2 Combined Sewer Basins

Wastewater System Planning has delineated the sanitary sewer and combined sewer system for analysis, accounting for control points in the system. Use these sewer basin boundaries for any modeling required for combined sewer basin design.

8.9.3 CAM 1180 Design Guidelines for Public Storm Drain Facilities

Refer to DSG section 8.7.3 for a general discussion of CAM 1180 that applies to combined sewer design. Drainage collection and grading are the same for combined sewer service areas.

8.9.4 Pipe Sewer Combined

Pipe sewer combined (PS) is the abbreviation used for mainline combined sewers in the Standard Plans.

PS design must consider conveyance as one element of the combined system, incorporating the principles used for both storm drain and sanitary sewer design. The design must:

- Provide for gravity drainage and sewerage of the entire defined combined sewer basin
- Provide for overflows controlled to the permitted limits at CSO outfalls
- Meet the goals of the long-term CSO control plan
- Include roadway grading and roadway drainage collection
- Provide backup reduction and protection of property from combined sewer backups
- Reduce flooding and protect of property from stormwater
- Protect the natural environment, including all receiving waters and ravines
- Provide for private property service needs, both existing and allowed development
- Provide for future extensions upstream and downstream of any proposed project
- Provide access for maintenance, repair, and rehabilitation of the combined sewer pipe system
- Not relocate an existing problem to a new location

8.9.4.1 Pipe Size

Combined Sewer pipe must be a minimum of 12 inches in diameter. Refer to DSG section 8.7.4.1 for a general discussion of pipe sizing that applies to combined sewer design. Combined sewers

must be sized to convey both drainage and sanitary sewage. Drainage design goals for sizing vary, especially since the system was originally designed to convey 15 gallons per minute (gpm) per acre and new combined sewer pipes can add flows that overwhelm the existing system. In addition, pipe sizing must be coordinated with all planning for control of CSOs. Always coordinate sizing with the Investigations and Modeling section because, typically, this complexity of design goals requires drainage and wastewater system modeling.

8.9.4.2 Velocity

Refer to DSG section 8.7.4.2 for a general discussion of velocity that applies to combined sewer design.

8.9.4.3 Pipe Slope

Minimum pipe slopes for sewers are provided in the Criteria for Sewage Works Design (The Orange Book). Sewer systems that cannot meet these minimum slopes need to be evaluated for pumping.

8.9.4.4 Cover

Standard cover on a combined sewer is 12 ft. This allows for gravity discharge from a basement.

8.9.4.5 Hydraulic Grade Line (HGL)

Refer to DSG section 8.7.4.5 for a general discussion of HGLs that applies to combined sewer design. In addition to showing any surcharge of the pipe on the pipe profile, for combined sewer design, the design documentation must identify boundary conditions used to determine the level of surcharge. There are regulators within the combined system intended to reduce overflows where feasible, and these regulators often are a reasonable downstream boundary condition. The sources for these downstream constraints should be noted in the design documentation. Any constraints on gravity services should be coordinated with SPU's DWW and GIS.

8.9.4.6 Profile

All drainage and wastewater plans must have a pipe profile showing MH spacing, pipe size, pipe material, and HGL. Measurements must be per Standard Plan 010, which is to the center of the MH.

For sanitary sewers, where a smaller sewer joins a larger one, the invert of the larger sewer should be lowered sufficiently to maintain the same energy gradient. A simple approach is to match the crown elevation to both pipes.

8.9.4.7 Alignment

Pipes must be laid with straight alignment between MHs.

8.9.4.8 Pipe Material

Refer to DSG section 8.7.4.8 for a general discussion of pipe material that applies to combined sewer design.

8.9.4.9 Pipe Bedding

Refer to DSG section 8.7.4.9 for a general discussion of pipe bedding that applies to combined sewer design.

8.9.4.10 Connections and Tie-In Requirements

Refer to DSG section 8.7.4.10 for a general discussion of connections and tie-in requirements that applies to combined sewer design.

When the mainline pipe is more than 20 ft deep, a vertical connection may be used (see Standard Plan 234). There are existing vertical connections in the sewer system identified on the historical side sewer cards as S.C. (standing connection), which may have more than one side sewer connection. When that is the case, the vertical portion is owned and maintained by the City.

8.9.5 Maintenance Holes

Refer to DSG section 8.7.5 for a general discussion of MHs that applies to combined sewer design. However, sewer MHs cannot use sumps as described in DSG section 8.7.5.5 or open drops as described in DSG section 8.7.5.8.

SPU does not allow bends in sewer mains between MHs.

8.9.5.1 Location and Spacing

Refer to DSG section 8.8.5.1 for a general discussion of MH location and spacing that applies to combined sewer design.

8.9.6 Outfalls

Refer to DSG section 8.7.10 for a general discussion of outfalls that applies to combined sewer design.

8.9.7 Overflow Monitoring

All combined sewer locations are monitored for overflows to water bodies. When an overflow is detected, SPU must contact Ecology within 24 hours. Coordinate all questions about CSO monitoring with the DWW LOB representative.

8.10 REHABILITATION METHODS USING TRENCHLESS TECHNOLOGY

SPU repairs and replaces drainage and wastewater pipe. The DWW LOB evaluates and prioritizes repairs and replacements. Several rehabilitation methods are available (Table 8-6). Most methods require highly skilled engineers and contractors. Check on current evaluation, design,

and contracting requirements within the Sewer Rehab and Design program at initiation of any rehabilitation project.

Tip: *Any significant reduction in diameter from larger pipe upstream to smaller downstream has significant clogging potential. This is true even when calculated flows are not restricted. Impacts and mitigation should be discussed with Operations early on in the project.*

Table 8-6
Rehabilitation Methods for Specified Defects in Pipelines

Rehabilitation Method	Corrosion	Crack/ Holes	Inflow, Infiltration, Exfiltration	Structural Problems	Inadequate Hydraulic Capacity
Cured in place pipe	Yes	Yes	Yes	Yes	No
Slip lining	Yes	Yes	Yes	Yes	No
Close-fit pipe	Yes	Yes	Yes	Yes	No
Pipe bursting	Yes	Yes	Yes	Yes	Yes
Pipe removal	Yes	Yes	Yes	Yes	Yes
Localize repair (robotic)	No	Marginal	Yes	Marginal	No
Localized repair (grouting)	No	Marginal	Yes	No	No
Localized repair (internal seal)	No	Yes	Yes	Yes	Yes
Localized repair (cured in place)	Yes	Yes	Yes	Yes	No
Modified slip lining (panel lining)	Yes	Yes	Yes	Yes	No
Modified slip lining (spiral wound)	Yes	Yes	Yes	Yes	No
Pipe reaming	Yes	Yes	Yes	Yes	Yes
Underground coatings and linings (cement mortar)	Yes	Yes	Marginal	No	No
Underground coatings and linings (epoxy lining)	Yes	Yes	Marginal	No	No
Underground coatings and linings (shotcrete)	Marginal	Yes	Marginal	Yes	No
Underground coatings and linings (gunite)	Marginal	Yes	Marginal	Yes	No
Thermoformed pipe	Yes	Yes	Yes	Yes	No
Carbon filter lining	Yes	Yes	Yes	Yes	Yes

Source: *Trenchless Technology Pipeline and Utility Design, Construction and Renewal* (Narafi and Gokhale 2005).

For rehabilitation projects, engineers should consider the condition and location of adjacent buried utilities, foundations and surface improvements, and depth of existing pipe. Dense or rocky soil may also limit the suitability of some methods. Pipe bursting is not recommended for either reinforced concrete or steel pipe. Pipe reaming is not recommended, except where

hydraulics and anticipated maintenance can accommodate potential variations in line and grade. All slip lining and thicker lining methods such as shotcrete and gunite require careful analysis of capacity reduction.

8.10.1.1 Lining

Lining is commonly completed by impregnating a felt or fiberglass mat with a resin that is cured by hot water, steam, hot air or ultraviolet (UV) light. Specialty contractors can perform these repairs. Table 8-7 presents advantages and disadvantages of lining as a rehabilitation method.

Table 8-7
Advantages and Disadvantages of Lining

Advantage	Disadvantage
Economical	Entry pits may be required
Strong	Bypass pumping of sewage or stormwater required
Excavation of existing line not required in tight easement situations, conflicts with other utilities	Bypass pumping of side sewers may be required
Laterals can be opened remotely via inside of mainline pipe	Requires specialty contractor with lining experience
	Reduced hydraulic capacity

8.10.1.2 Slip lining

Slip lining is insertion of a new pipe, either continuous (typically butt-fused HDPE) or segmented (e.g., ductile iron, PVC, or HDPE), of smaller diameter into an existing pipe. Table 8-8 presents advantages and disadvantages of slip lining as a rehabilitation method.

Table 8-8
Advantages and Disadvantages of Slip Lining

Advantage	Disadvantage
Economical	Entry pits usually required
Strong	Service lateral connections must be excavated for both bypass and reconnection
Bypass pumping of sewage may not be needed for segmented slip-line pipe	Reduced hydraulic capacity

Tip: *The line must be kept from floating during grouting of the annular space. Additionally, the condition of existing pipe may limit the length of slip-lined runs between pits, diameter of slip-lined pipe, and/or lengths of segmented pipe pieces.*

8.10.1.3 Pipe Bursting

Pipe bursting is another form of trenchless technology and a common method for replacing aging, deteriorated, or undersized utility pipelines. In pipe bursting, the existing pipeline is fragmented and forced into the surrounding soil by pulling a bursting head through the line. A new pipe (typically butt-fused HDPE) of equal or larger diameter is pulled behind the bursting

head. New MHs are usually provided at insertion and withdrawal pits. Table 8-9 presents advantages and disadvantages of pipe bursting as a rehabilitation method.

Table 8-9
Advantages and Disadvantages of Pipe Bursting

Advantage	Disadvantage
Creates a new, strong pipeline, not just rehabilitation of existing pipes	Entry pits are required
Capacity can be increased	Service lateral connections must be excavated for both bypass and reconnection
Preparation of existing line is not critical	Bypass pumping of sewage required
	MHs must usually be replaced
	Not practical for reinforced concrete or ductile iron or corrugated metal

8.10.1.4 Pipe Reaming

Similar to pipe bursting and horizontal directional drilling (HDD), pipe reaming is a method for replacing undersized utility pipelines. In pipe reaming, the existing pipeline and some surrounding soil is removed and a new pipe (typically butt-fused HDPE or ductile iron) of larger diameter is pulled behind the drilling head. The existing pipe acts as the bore hole. Table 8-10 presents advantages and disadvantages of pipe reaming as a rehabilitation method.

Table 8-10
Advantages and Disadvantages of Pipe Reaming

Advantage	Disadvantage
Creates a new, strong pipeline, not just rehabilitation of existing pipes	Entry pits are required
Capacity can be increased	Service lateral connections must be excavated for reconnection
Preparation of existing line is not critical	Bypass pumping of sewage required during repair
	MHs must usually be replaced
	Not practical for reinforced concrete or ductile iron
	Holding line and grade is difficult, so it is not appropriate for flat mains (5% or greater recommended)

Tip: *All new pipe and main installations must be tested for SPU acceptance. Typically, an air pressure or hydrostatic test is followed by a CCTV inspection. Pipes and mains that are repaired by rehabilitation methods are normally inspected using CCTV prior to returning to service. Standard testing procedures described in Standard Specifications section 7-17.3(3) should be modified for the repair method specified.*

8.11 CONSTRUCTION

This section describes some common alternative construction methods that apply to drainage and wastewater infrastructure. For standard requirements, see the Standard Specifications. For guidelines on constructability considerations for your project, refer to *DSG Chapter 3, Design for Construction*.

8.11.1 Alternative Construction Methods

For a general discussion of types of trenchless construction technology, refer to *DSG Chapter 5, Water Infrastructure*, section 5.8.3.8 (this section provides similar and overlapping information) for new pipe installation.

For all trenchless installations, a thorough geotechnical subsurface investigation must be completed to classify subsurface conditions. Existing underground utilities must be located and avoided. Always consider potholing for utility conflicts during design to minimize risks. Depending on the records and how close a bore is to an existing utility or other potential obstruction, potholing may be required during design. Refer to section 3.15 of *DSG Chapter 3, Design for Construction* for details regarding geotechnical services and to identify all construction methods under consideration while scoping for a geotechnical investigation.

Environmental research along an alignment should also be considered. Groundwater or soil contamination along a pipe alignment can affect the feasibility of trenchless construction methods. Always consider development along the alignment that may have used tiebacks or soil nails while constructing a building foundation. The City requires relation of tie backs after the tension is no longer required. Excavation through active tensioned tie backs or soil nails is not allowed. Excavation through inactive detensioned tie backs or soil nails will typically not be feasible using trenchless alternatives.

Table 8-11 summarizes the methods of trenchless technology alternatives, including considerations of how or how not it may be appropriate for your project.

Table 8-11
Trenchless Technology Alternatives

Method	Pipe Diameter (inches)	Preferred Soil Conditions	Soil Conditions Not Conducive	Install Below Groundwater Table
Boring and jacking	4–72”	Clay, silt, sand, or gravel	Cobbles, boulders, or rock	OK
Microtunneling	12–90” +	Clay, silt, sand, or soft rock	Wood, cobbles, or boulders greater than 1/3 of bore diameter	OK
Horizontal directional drilling (HDD)	2–72”	Clay, silt, sand, or soft rock	Gravel, cobbles, boulders, or wood	OK

Tips: *Trenchless technologies can sometimes be an excellent way to reduce surface impacts from pipeline installation. Be aware that the duration that an access pit is open can be greater than the time required for open-cut excavation.*

Standard Specifications section 7-17.3(2)H3 describes minimum requirements for a single shop drawing with multiple components required from a trenchless contractor. The design process should consider all of those elements required in the shop drawing submittal when specifying a trenchless pipe installation.

8.11.1.1 Boring and Jacking

Boring and jacking, also known as auger boring, is commonly used for utility installation where there are surface obstacles, such as major roadways or railroads. In boring and jacking, an auger-type cutting head is used to bore a hole horizontally between two boring pits. Helical auger flights are added as the bore gets longer and are used to move the cuttings out of the hole and into the drive pit, where they can be moved to the surface. A casing pipe is installed behind the auger, and the product pipe is installed inside the casing.

See Standard Specifications section 2-17 for additional details.

8.11.1.2 Microtunneling

Microtunneling is commonly used for larger diameter utility installations. In this method, hydraulic jacks are used to push pipes (pipe-jacking) through the ground behind a tunneling shield on a microtunnel boring machine as the excavation is taking place. The boring machine travels horizontally from a jacking shaft to a receiving shaft. Cuttings are then conveyed from the excavation face through the tunnel and up the driving shaft to the surface. Pipe jacking, alignment control, boring machine location, and cuttings transport are remotely controlled.

Microtunneling specifications are complex, and the design engineer must carefully consider machine specifications in addition to pipe and pipe joint requirements. The project team should include an engineer experienced in tunneling or microtunneling.

8.11.1.3 Horizontal Directional Drilling

HDD is typically less accurate than other types of trenchless technologies. HDD is not appropriate for shallow pipe slopes that rely on a consistent line and grade for conveying flow. HDD can be a feasible alternative to open-cut installation, particularly when existing utilities, roads, or other surface obstacles preclude an open cut and there is sufficient pipe slope to allow for varying line and grade on the pipeline. Since variations in line and grade have maintenance impacts, even when hydraulically acceptable, consultation with Operations is required.

See Standard Specifications section 2-16 for additional details.

Cobbles, boulders, and wood are significant risks to utility installation using HDD. For larger diameter pipes (>12 inches), the risks associated with HDD significantly increase. SCL may not allow directional drilling in any area with underground power. The direction of drilling and soil conditions must be examined carefully when drilling into the hillside. There has been loss of life in the past when a contractor drilled uphill and a saturated soil mass flowed into the casing. Work safety is the responsibility of the Contractor, but the submittals must be reviewed carefully for anticipated risks.

8.11.2 Construction Stormwater Control

See *DSG Chapter 3, Design for Construction* for details on stormwater controls for construction projects.

8.11.3 Bypassing Flow in Existing Sewer

Drainage or wastewater projects often need to bypass flow around the construction area to maintain service. Pipes and pumps should be sized to convey the maximum expected flow during the construction period. A system-wide sewer model is available. The sewer rehabilitation group has access to this model and can provide input to support your design when planning to bypass flow. Bypass of side sewers can also be required and complicates any bypassing plan.

For additional information, see *DSG Chapter 3, Design for Construction*.

8.11.4 Abandonment and Removals

8.11.4.1 Pipeline

Pipes that are replaced in the same location and grade are normally removed and hauled away. Pipes with a diameter of 12 inches or greater that are abandoned in place are plugged at the end and filled with flowable concrete or sand. All pipe 12 inches and larger to be abandoned and filled must be identified on design drawings. See Standard Specifications section 2.02.3 (5).

8.11.4.2 Abandoning Laterals

All laterals that are in use to convey flows from private property must be reconnected to a new or replaced mainline pipe. If the flow being reconnected is not mapped as a permitted flow, contact stormwater or wastewater source control to coordinate with the property owner.

Laterals for services that are not in use do not need to be replaced. The project team should identify any unused laterals and discuss disposition with the DWW LOB. All lateral connections create some increased risk to pipe operation. When the DWW LOB concurs, identify unused laterals and tees or wyes to be abandoned by the project. SPU does not provide for unknown future connections.

Anticipated connections from planned development should be coordinated with the developer.

8.11.4.1 Asbestos-Containing Pipe

Asbestos-containing pipe may be encountered during construction, including modifications to, or tying in with, existing facilities. This pipe includes ABCO Truss pipe, asbestos cement pipe, and CMP with asbestos coating. The design engineer should indicate, on project drawings or specifications, that the Contractor, when working with asbestos-containing pipe, is required to maintain workers' exposure to asbestos material at or below the limit prescribed in Washington Administrative Code (WAC) 296-62-07705.

See section 3.9.6 of *DSG Chapter 3, Design for Construction* for additional details.

8.11.5 Acceptance Procedures

The design engineer must include special testing procedures in the Project Manual. See Standard Specifications section 7-17.3(3) for cleaning and testing procedures.

8.11.5.1 Leak and Pressure Testing

All tests must be performed in the presence of the resident engineer. For repairs, the inspector observes the installation but testing is not performed. Low pressure air test is the most common leak/pressure test. Note that pipe under the water table or a fluctuating water table should also be looked at for leaks at joints while the water table is up. Passing the low-pressure air test does not demonstrate that there is no leak. Exfiltration testing is required where exfiltration could contribute to landslide potential. Exfiltration and infiltration testing can require large amounts of water, which can be a significant cost for potable water and for disposal. pH is a significant pollutant issue when using water to test new concrete structures.

8.11.5.2 Flexible Pipe Testing

PVC and HDPE pipe require a mandrel test. Wait 30 days after backfilling to test. No final pavement restoration can occur until the pipe is accepted per Standard Specifications section 7-17.3(3)F. If it passes the 5% deflection rule for smaller pipes or the 3% deflection rule for larger pipes, the pressure test, and CCTV inspection, the pipe is accepted. SPU requirements for roundness in flexible pipes are based on both cleaning equipment needs and PACP standards for pipe evaluation.

8.11.5.3 CCTV Inspection

Before pavement restoration, newly constructed storm drain or sewer mainline, or CB connection, pipes must be inspected using CCTV. See Standard Specifications section 7-17.3(3)G. On a project-specific basis, laterals may also be included.

Before the CCTV inspection, all sewer and storm mains must be cleaned and pressure tested. CCTV inspection should be from MH to MH or from CB to main and tracked using asset identification numbers. CCTV is stored in the granite database as a pipe record by asset identification number.

8.11.6 Connecting to Existing Systems

The storm, sanitary sewer, and combined sewer systems in the SPU-maintained network are comprised of many types and sizes of materials, with varying ages and conditions. When connecting new pipe into existing systems, SPU recommends determining the:

- Age of the system
- Material composition of the existing system, including lateral connections
- Design criteria that were followed (e.g., design storm and flow and street loading)

8.12 DRAINAGE AND SEWAGE EASEMENTS

An easement gives SPU the right to access a utility, such as a pipe, MH, or CB, on property it does not own. Easements must be project specific and should provide sufficient access for maintenance and future replacement of a pipe. Table 8-12 lists SPU's minimum requirements for drainage and sewer pipe easements for maintenance. This table is a guideline. Engineering judgment about the depth of the pipe and any future excavation, access restrictions, and future expansion may call for larger easements. For pipelines in easements, consider installing the

carrier pipe in a casing. Refer to section 4.11 of *DSG Chapter 4, General Design Considerations* for additional details regarding casing pipe.

Table 8-12
SPU Minimum Drainage and Sewer Easements

Inside Pipe Diameter or Nominal Pipe Diameter (inches)	Minimum Easement Width (ft)
<12–16	12
18–24	14
30–48	18
60	20
72	24
84	28
96	32
108	36
120	40
132	44
144	48

8.13 RESOURCES

Documents

- Ecology, Stormwater Management Manual for Western Washington Ecology SWMM
- FHWA, Urban Drainage Design Manual, Third Edition HEC-22, FHWA, 2009
- FHWA, Hydraulic Design of Highway Culverts, HDS No. 5, FHWA, 2012
- King County, Surface Water Design Manual, King County, WA, 2016
- WSDOT, Standard Plans for Road, Bridge, and Municipal Construction, 2020
- WSDOT, Hydraulics Manual, M 23-03, WSDOT, March 2016
- WSDOT, Design Manual, M 22-01, WSDOT, November 2016

Removed for Security